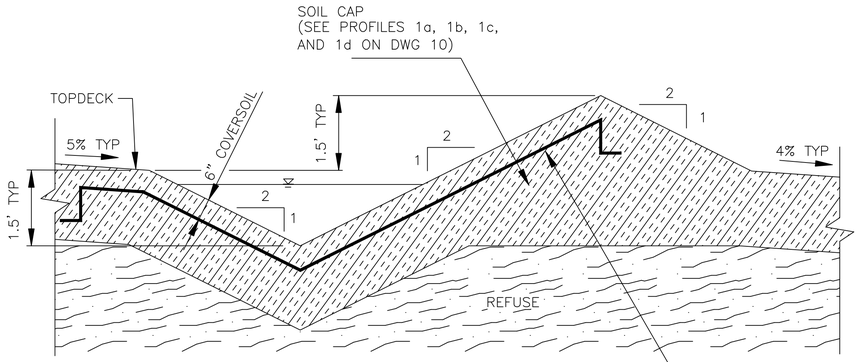

SECTION 5 / 8 | 12
INTERM TYPICAL TOPDECK BERM–DITCH
NOT TO SCALE

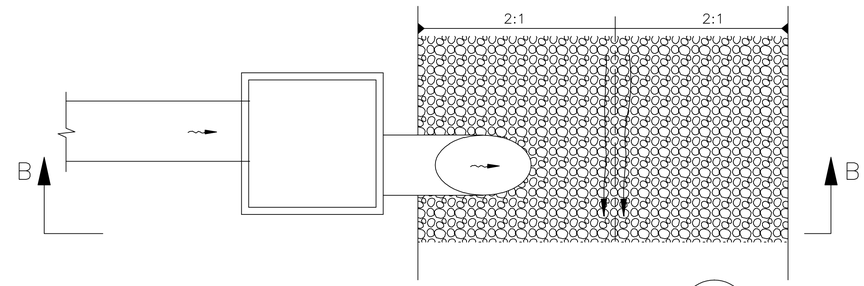

PLAN VIEW 6a / 8 | 12
ENERGY DISSIPATOR OPTION 1 (TYPICAL)
NOT TO SCALE

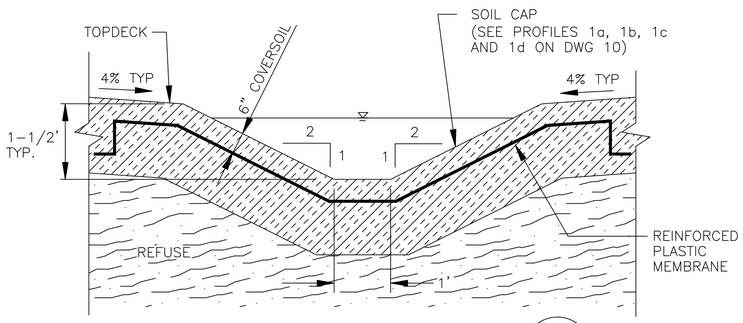

SECTION 7 / 8 | 12
INTERIM TYPICAL SWALE DITCH
NOT TO SCALE

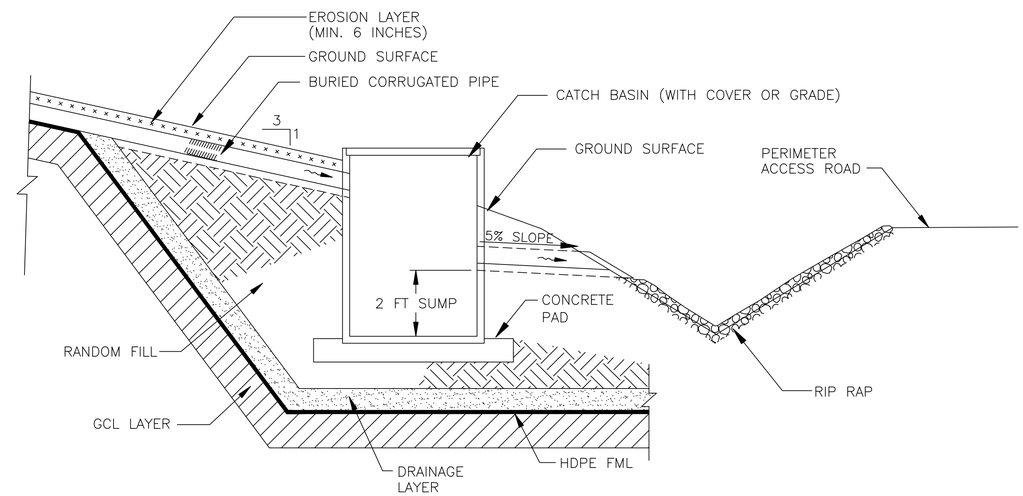

SECTION B / B / 12 | 12
ENERGY DISSIPATOR (TYPICAL) NOT TO SCALE

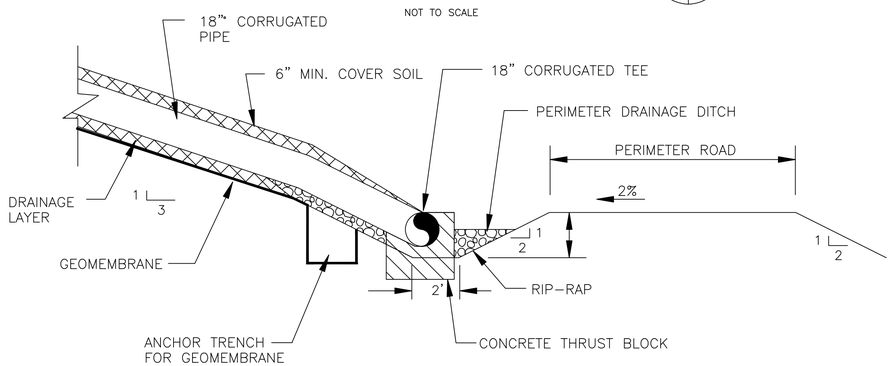

SECTION 6b / 8 | 12
CHUTE/ENERGY DISSIPATER
OPTION 2 (TYPICAL)
NOT TO SCALE

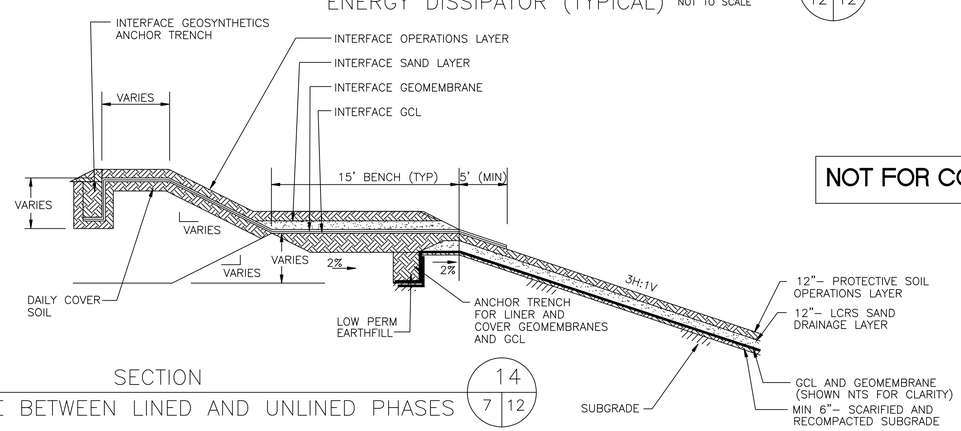

SECTION 14 / 7 | 12
INTERFACE BETWEEN LINED AND UNLINED PHASES
NOT TO SCALE

NOT FOR CONSTRUCTION

REV	DESCRIPTION OF REVISION	BY	DATE
△			
△			
△			
△			
△			
△			

Registered Professional Engineer (Civil) CERTIFICATE NO 30818 ROBERT J. HEALY Date Signed ARIZONA U.S.A.

Woodward-Clyde Consultants
Engineering & sciences applied to the earth & its environment
410 N. 44th St., Suite 350
Phoenix, AZ 85008

WARNING
0 1/2 1
IF THIS BAR DOES NOT MEASURE 1" THEN DRAWING IS NOT TO SCALE

DESIGNED	SM
DRAWN	EG
CHECKED	BH
PEER REVIEWED	LH
PROJECT MANAGER	DM
DATE	4/24/98

CINDER LAKE LANDFILL Flagstaff, Arizona

STORMWATER DRAINAGE
SYSTEM TYPICAL DETAIL

REVISION △
PROJECT 934X246A
DRAWING 12

Q:\934X246A\CIN2012.DWG