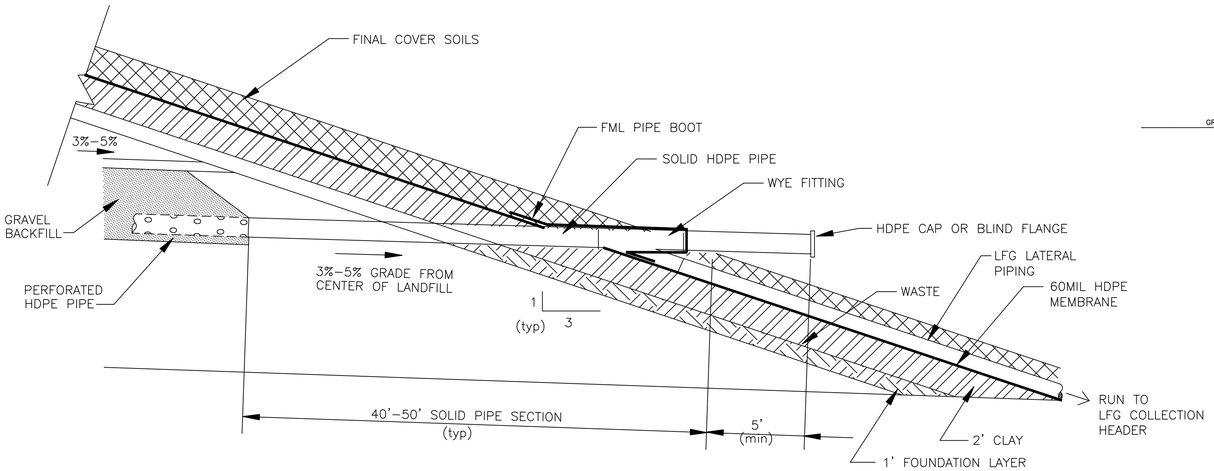

SECTION 8 / 9 13

TYPICAL LFG HORIZONTAL COLLECTION TRENCH TERMINATION

NOT TO SCALE

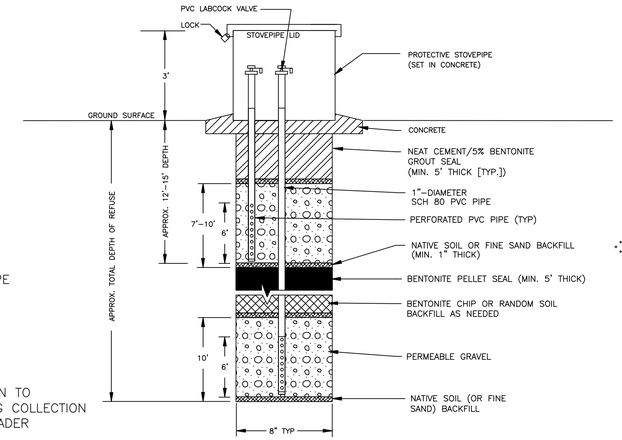

DETAIL 9 / 9 13

TYPICAL LFG PROBE (TYP)

NOT TO SCALE

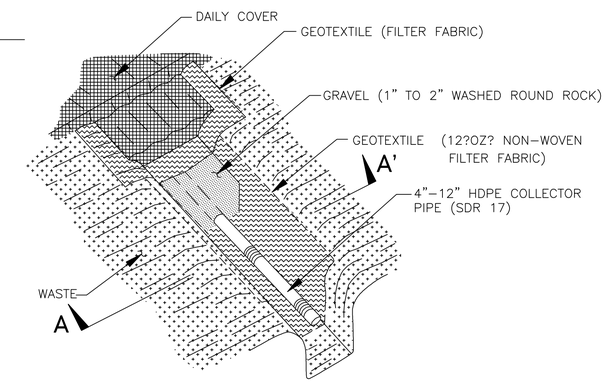

ISOMETRIC DETAIL 10 / 9 13

TYPICAL/HORIZONTAL LANDFILL GAS COLLECTION TRENCH STATION

NOT TO SCALE

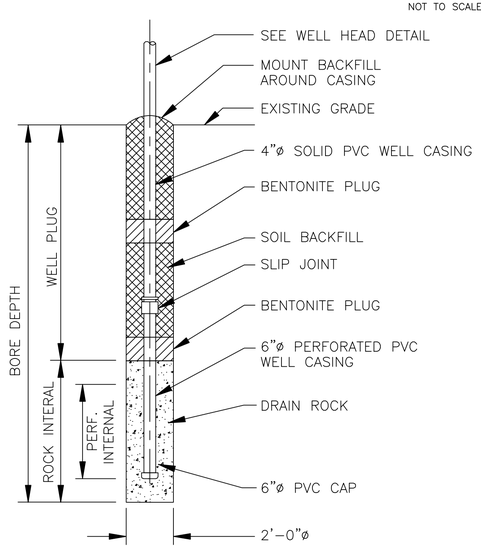

DETAIL 11 / 9 13

VERTICAL EXTRACTION WELL (TYP)

NOT TO SCALE

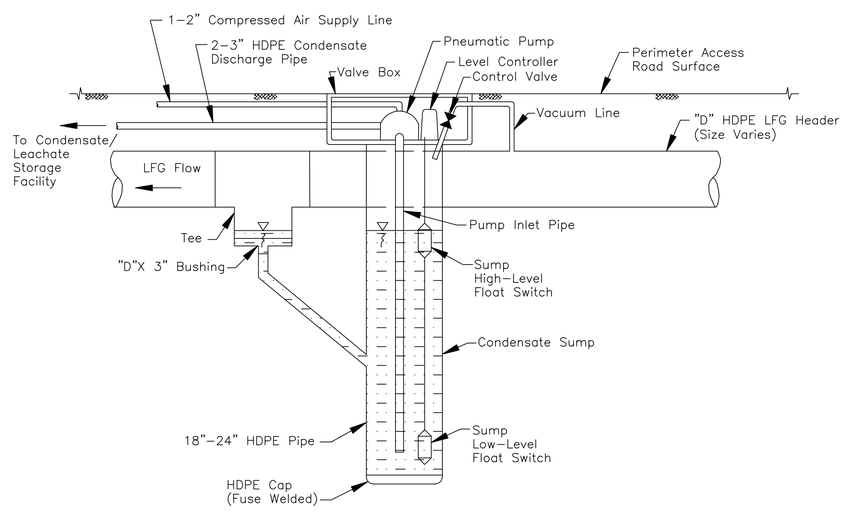

DETAIL 13 / 9 13

TYPICAL CONDENSATE SUMP (TYP)

NOT TO SCALE

NOT FOR CONSTRUCTION

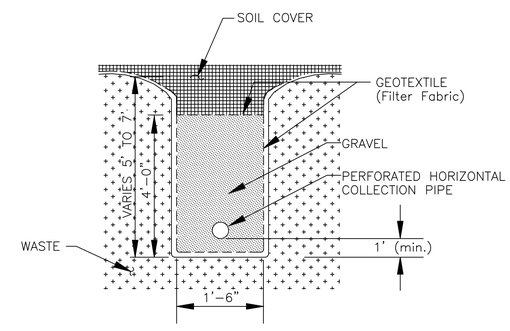

SECTION A / A 13 / 13

TYPICAL/HORIZONTAL LANDFILL GAS COLLECTION TRENCH STATION

NOT TO SCALE

NOTE: 1. THOUGH NO LFG WELLS ARE PRESENTLY DESIGNED THEY MAY BE REQUIRED. THIS DETAIL DEPICTS TYPICAL LFG WELL DESIGN.

REV	DESCRIPTION OF REVISION	BY	DATE
△			
△			
△			
△			
△			
△			

Woodward-Clyde Consultants

Engineering & sciences applied to the earth & its environment

410 N. 44th St., Suite 350
Phoenix, AZ 85008

WARNING

0 1/2 1

IF THIS BAR DOES NOT MEASURE 1" THEN DRAWING IS NOT TO SCALE

DESIGNED	SM
DRAWN	EG
CHECKED	BH
PEER REVIEWED	LH
PROJECT MANAGER	DM
DATE	4/24/98

CINDER LAKE LANDFILL Flagstaff, Arizona

LANDFILL GAS COLLECTION SYSTEM CROSS SECTION AND DETAIL

REVISION △

PROJECT 934X246A

DRAWING 13

Q:\934X246A\CIN2013.DWG