APPENDIX A EXISTING TRAFFIC COUNTS

Traffic Research and Analysis, Inc.
3844 East Indian School Road
Phoenix, AZ 85018
(602) 840-1500

Site ID	File Name	Route	Location	Direction	Count Type	Count Dur	Start Date	Start Time	Avg Vol	AM PkHr	AM PkVol	AM PHF	PM PkHr	PM PkVol	PM PHF	Day Corr
1	1300593	SANTA FE AVE (	W of PONDEROSA PKWY	EB	VOL	48	3/12/2013	0:00	14424	11:45	1080	0.9080	16:45	1446	0.8799	0.9877
1	1300594	SANTA FE AVE (	W of PONDEROSA PKWY	WB	VOL	48	3/12/2013	0:00	15746	7:15	1396	0.7872	14:30	1224	0.9241	0.9837
2	1300595	PONDEROSA PK	S of SANTA FE AVE (RT 66)	NB	VOL	48	3/12/2013	0:00	8315	7:15	1002	0.8107	17:00	765	0.9375	0.9764
2	1300596	PONDEROSA PK	S of SANTA FE AVE (RT 66)	SB	VOL	48	3/12/2013	0:00	6666	11:45	487	0.9512	16:45	722	0.8811	0.9645
3	1300597	BUTLER AVE	W of PONDEROSA PKWY	EB	VOL	48	3/12/2013	0:00	13558	11:45	979	0.9271	16:45	1358	0.8887	0.9819
3	1300598	BUTLER AVE	W of PONDEROSA PKWY	WB	VOL	48	3/12/2013	0:00	14246	7:30	1190	0.8070	16:45	1134	0.9376	0.9867
4	1300599	BUTLER AVE	E of HUNTINGTON DR	EB	VOL	48	3/12/2013	0:00	11135	11:45	730	0.9006	16:45	1200	0.9023	0.9807
4	1300600	BUTLER AVE	E of HUNTINGTON DR	WB	VOL	48	3/12/2013	0:00	11184	7:30	1272	0.8357	16:30	800	0.9762	0.9828
5	1300601	BUTLER AVE	W of HEROLD RANCH RD	EB	VOL	48	3/12/2013	0:00	7674	7:15	592	0.8402	17:00	802	0.9369	0.9651
5	1300602	BUTLER AVE	W of HEROLD RANCH RD	WB	VOL	48	3/12/2013	0:00	7064	7:30	808	0.8206	16:45	582	0.9644	0.9620
6	1300603	4TH ST	N of BUTLER AVE	NB	VOL	48	3/12/2013	0:00	5578	7:15	620	0.9219	17:00	482	0.9478	0.9576
6	1300604	4TH ST	N of BUTLER AVE	SB	VOL	48	3/12/2013	0:00	4786	7:30	436	0.9019	15:15	482	0.9104	0.9396
7	1300605	4TH ST	S of SANTA FE AVE (RT 66)	NB	VOL	48	3/12/2013	0:00	13210	7:15	1166	0.8502	15:15	1173	0.8663	0.9678
7	1300606	4TH ST	S of SANTA FE AVE (RT 66)	SB	VOL	48	3/12/2013	0:00	12632	7:15	994	0.8279	16:45	1193	0.9177	0.9571
Historical Count Comparison					**2013**	**2012**	**2007**	**2013**	**2012**	**2007**						
1	1300593	SANTA FE AVE (	W of PONDEROSA PKWY	EB	14,424	15,232	15,679	30,170	31,344	33,749						
1	1300594	SANTA FE AVE (	W of PONDEROSA PKWY	WB	15,746	16,112	18,070									
2	1300595	PONDEROSA PK	S of SANTA FE AVE (RT 66)	NB	8,315	5,766	7,642	14,981	12,616	14,716						
2	1300596	PONDEROSA PK	S of SANTA FE AVE (RT 66)	SB	6,666	6,850	7,074									
3	1300597	BUTLER AVE	W of PONDEROSA PKWY	EB	13,558	11,583	15,002	27,804	23,420	28,989						
3	1300598	BUTLER AVE	W of PONDEROSA PKWY	WB	14,246	11,837	13,987									
4	1300599	BUTLER AVE	E of HUNTINGTON DR	EB	11,135	11,476		22,319	22,956							
4	1300600	BUTLER AVE	E of HUNTINGTON DR	WB	11,184	11,480										
5	1300601	BUTLER AVE	W of HEROLD RANCH RD	EB	7,674	7,229	7,330	14,738	13,727	15,488						
5	1300602	BUTLER AVE	W of HEROLD RANCH RD	WB	7,064	6,498	8,158									
6	1300603	4TH ST	N of BUTLER AVE	NB	5,578	5,354	4,830	10,364	9,944	9,603						
6	1300604	4TH ST	N of BUTLER AVE	SB	4,786	4,590	4,773									
7	1300605	4TH ST	S of SANTA FE AVE (RT 66)	NB	13,210	12,164	9,901	25,842	24,020	19,976						
7	1300606	4TH ST	S of SANTA FE AVE (RT 66)	SB	12,632	11,856	10,075									

Traffic Research & Analysis, Inc.
3844 E. Indian School Rd.
Phoenix, AZ 85018
(602) 840-1500 FAX (602) 840-1577

Job Number	File ID	North / South Streets	East / West Streets	Start Date / Time	End Date /Time	Count Intvl	Count Total	Peak Hour	Peak Hr Total
12149	1300120	PONDEROSA PKWY	SANTA FE AVE	3/12/2013 16:00	3/12/2013 17:45	15	5767	5:00 PM	2987
12149	B300120	PONDEROSA PKWY	SANTA FE AVE	3/12/2013 16:00	3/12/2013 17:45	15	42	4:30 PM	25
12149	1300121	DRWY / BABBITT DR	BUTLER AVE	3/12/2013 16:00	3/12/2013 17:45	15	4986	4:45 PM	2652
12149	B300121	DRWY / BABBITT DR	BUTLER AVE	3/12/2013 16:00	3/12/2013 17:45	15	6	4:30 PM	6
12149	1300122	4TH ST	BUTLER AVE	3/12/2013 16:00	3/12/2013 17:45	15	2943	5:00 PM	1535
12149	B300122	4TH ST	BUTLER AVE	3/12/2013 16:00	3/12/2013 17:45	15	0		
12149	1300123	4TH ST	INDUSTRIAL DR / HUNTINGTON DR	3/12/2013 16:00	3/12/2013 17:45	15	5796	4:45 PM	3071
12149	B300123	4TH ST	INDUSTRIAL DR / HUNTINGTON DR	3/12/2013 16:00	3/12/2013 17:45	15	10	5:00 PM	9
12149	1300124	PONDEROSA PKWY / BUTLER AVE	HUNTINGTON DR / BUTLER AVE	3/12/2013 16:00	3/12/2013 17:45	15	6023	5:00 PM	3106
12149	B300124	PONDEROSA PKWY / BUTLER AVE	HUNTINGTON DR / BUTLER AVE	3/12/2013 16:00	3/12/2013 17:45	15	20	4:15 PM	15
12149	1300125	I-40 SB	BUTLER AVE	3/12/2013 16:00	3/12/2013 17:45	15	4163	4:45 PM	2257
12149	B300125	I-40 SB	BUTLER AVE	3/12/2013 16:00	3/12/2013 17:45	15	8	4:00 PM	7
12149	1300126	I-40 NB	BUTLER AVE	3/12/2013 16:00	3/12/2013 17:45	15	4041	5:00 PM	2116
12149	B300126	I-40 NB	BUTLER AVE	3/12/2013 16:00	3/12/2013 17:45	15	8	4:15 PM	7
12149	1300127	NONE / HEROLD RANCH RD	BUTLER AVE	3/12/2013 16:00	3/12/2013 17:45	15	2598	5:00 PM	1395
12149	B300127	NONE / HEROLD RANCH RD	BUTLER AVE	3/12/2013 16:00	3/12/2013 17:45	15	10	4:00 PM	7
12149	1300128	4TH ST	SANTA FE AVE	3/12/2013 16:00	3/12/2013 17:45	15	8763	5:00 PM	4468
12149	B300128	4TH ST	SANTA FE AVE	3/12/2013 16:00	3/12/2013 17:45	15	61	5:00 PM	41
13069	B300350	4TH ST	SOLIERE AVE	5/29/2013 16:00	5/29/2013 17:45	15	29	4:30 PM	18
13069	B300351	4TH ST	SPARROW AVE	5/29/2013 16:00	5/29/2013 17:45	15	6	5:00 PM	5
13069	P300350	4TH ST	SOLIERE AVE	5/29/2013 16:00	5/29/2013 17:45	15	3428	4:30 PM	1838
13069	P300351	4TH ST	SPARROW AVE	5/29/2013 16:00	5/29/2013 17:45	15	2307	4:30 PM	1221

TRAFFIC RESEARCH & ANALYSIS, INC.
Specializing in Traffic Data Collection

Traffic Research & Analysis, Inc.
3844 East Indian School Road
Phoenix, AZ 85018
(602) 840-1500

Intersection TMC: 1300120
Count Date: 3/12/2013

AM

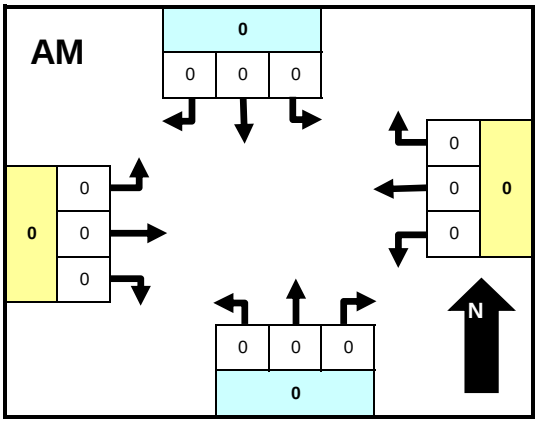

	From North PONDEROSA PKWY				From East SANTA FE AVE				From South PONDEROSA PKWY				From West SANTA FE AVE				INTSEC
Time	LT	Thru	RT	Ped	LT	Thru	RT	Ped	LT	Thru	RT	Ped	LT	Thru	RT	Ped	TOTAL
Total	0	0	0	0	0	0	0	0	0	0	0	0	0	0	0	0	0
Peak																	0

MID

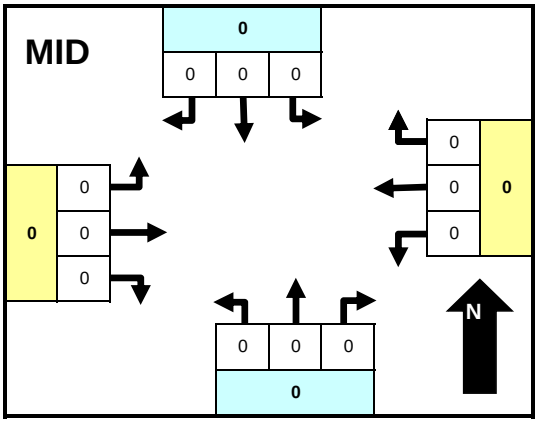

Time	LT	Thru	RT	Ped	LT	Thru	RT	Ped	LT	Thru	RT	Ped	LT	Thru	RT	Ped	TOTAL
Total	0	0	0	0	0	0	0	0	0	0	0	0	0	0	0	0	0
Peak																	0

PM 17:00

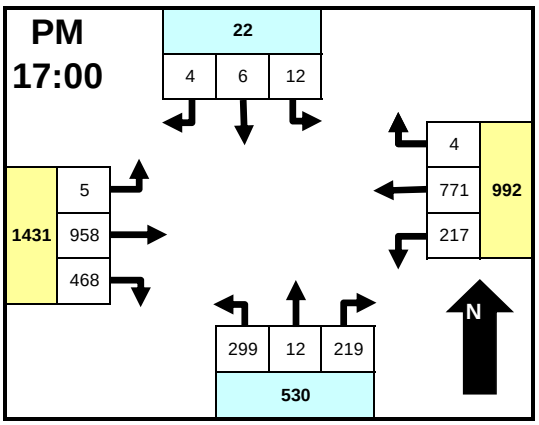

Time	LT	Thru	RT	Ped	LT	Thru	RT	Ped	LT	Thru	RT	Ped	LT	Thru	RT	Ped	TOTAL
16:00	1	3	0	1	38	190	6	0	59	1	49	4	0	250	83	0	685
16:15	2	1	2	0	45	203	3	0	69	1	51	1	0	221	101	0	700
16:30	6	0	1	4	53	195	3	0	68	3	45	0	1	247	92	0	718
16:45	2	1	2	2	43	174	4	0	81	1	49	4	1	211	102	0	677
17:00	0	0	0	0	67	182	1	0	93	0	44	2	1	242	149	0	781
17:15	2	3	0	1	39	177	1	0	75	8	63	1	0	243	111	0	724
17:30	6	2	2	1	62	199	2	0	59	2	56	0	2	255	114	6	768
17:45	4	1	2	0	49	213	0	0	72	2	56	1	2	218	94	0	714
Total	23	11	9	9	396	1533	20	0	576	18	413	13	7	1887	846	6	5767
Peak	12	6	4	2	217	771	4	0	299	12	219	4	5	958	468	6	2987

Intersection Statistics

Per	Peak Hour	Pk Hr Vol	Peak Intvl	Pk Intv Vol
AM				
MID				
PM	5:00 PM	2987	5:00 PM	781

Approach Statistics

Per	Peak Hour	Pk Hr Vol	Peak Hour	Pk Hr Vol	Peak Hour	Pk Hr Vol	Peak Hour	Pk Hr Vol
AM								
MID								
PM	4:00 PM	28	5:00 PM	992	4:45 PM	538	4:45 PM	1437

Comments

Approach & Departure Volumes (No Peds)

Per	Approach	Depart	Approach	Depart	Approach	Depart	Approach	Depart
AM	0	0	0	0	0	0	0	0
MID	0	0	0	0	0	0	0	0
PM	43	45	1949	2323	1007	1253	2740	2118

TRAFFIC RESEARCH & ANALYSIS, INC.
Specializing in Traffic Data Collection

Traffic Research & Analysis, Inc.
3844 East Indian School Road
Phoenix, AZ 85018
(602) 840-1500

Intersection TMC: 1300121
Count Date: 3/12/2013

AM

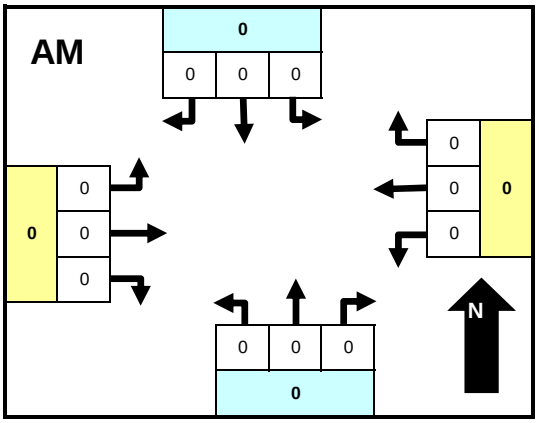

Time	From North DRWY LT	Thru	RT	Ped	From East BUTLER AVE LT	Thru	RT	Ped	From South BABBITT DR LT	Thru	RT	Ped	From West BUTLER AVE LT	Thru	RT	Ped	INTSEC TOTAL
Total	0	0	0	0	0	0	0	0	0	0	0	0	0	0	0	0	0
Peak																	0

MID

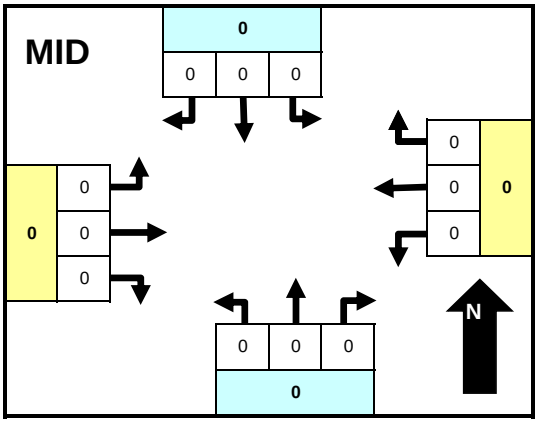

Time	LT	Thru	RT	Ped	LT	Thru	RT	Ped	LT	Thru	RT	Ped	LT	Thru	RT	Ped	TOTAL
Total	0	0	0	0	0	0	0	0	0	0	0	0	0	0	0	0	0
Peak																	0

PM 16:45

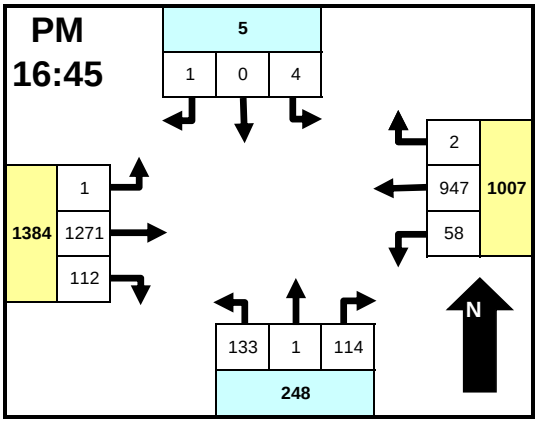

Time	LT	Thru	RT	Ped	LT	Thru	RT	Ped	LT	Thru	RT	Ped	LT	Thru	RT	Ped	TOTAL
16:00	2	1	3	0	16	204	0	2	30	0	26	1	2	306	29	0	622
16:15	3	2	1	0	16	198	2	1	28	1	24	0	0	240	19	0	535
16:30	1	0	0	0	15	209	1	2	32	0	29	0	1	266	27	0	583
16:45	2	0	0	0	17	236	1	0	31	0	24	0	0	275	25	0	611
17:00	0	0	1	1	20	237	1	0	36	1	33	4	0	342	32	0	708
17:15	1	0	0	0	10	238	0	0	40	0	29	0	0	321	29	0	668
17:30	1	0	0	0	11	236	0	0	26	0	28	3	1	333	26	0	665
17:45	0	0	0	1	13	220	0	0	29	0	20	0	0	284	27	0	594
Total	10	3	5	2	118	1778	5	5	252	2	213	8	4	2367	214	0	4986
Peak	4	0	1	1	58	947	2	0	133	1	114	7	1	1271	112	0	2652

Intersection Statistics

Per	Peak Hour	Pk Hr Vol	Peak Intvl	Pk Intv Vol
AM				
MID				
PM	4:45 PM	2652	5:00 PM	708

Approach Statistics

Per	Peak Hour	Pk Hr Vol	Peak Hour	Pk Hr Vol	Peak Hour	Pk Hr Vol	Peak Hour	Pk Hr Vol
AM								
MID								
PM	4:00 PM	15	4:45 PM	1007	4:30 PM	259	5:00 PM	1395

Comments

Approach & Departure Volumes (No Peds)

Per	Approach	Depart	Approach	Depart	Approach	Depart	Approach	Depart
AM	0	0	0	0	0	0	0	0
MID	0	0	0	0	0	0	0	0
PM	18	11	1901	2590	467	335	2585	2035

TRAFFIC RESEARCH & ANALYSIS, INC.
Specializing in Traffic Data Collection

Traffic Research & Analysis, Inc.
3844 East Indian School Road
Phoenix, AZ 85018
(602) 840-1500

Intersection TMC: 1300122
Count Date: 3/12/2013

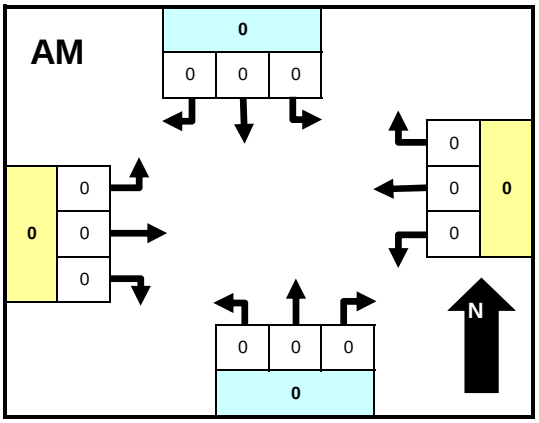

Time	From North 4TH ST LT	Thru	RT	Ped	From East BUTLER AVE LT	Thru	RT	Ped	From South 4TH ST LT	Thru	RT	Ped	From West BUTLER AVE LT	Thru	RT	Ped	INTSEC TOTAL
Total	0	0	0	0	0	0	0	0	0	0	0	0	0	0	0	0	0
Peak																	0

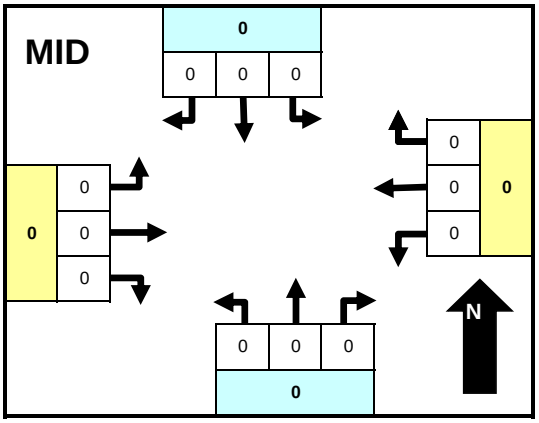

Time	From North 4TH ST LT	Thru	RT	Ped	From East BUTLER AVE LT	Thru	RT	Ped	From South 4TH ST LT	Thru	RT	Ped	From West BUTLER AVE LT	Thru	RT	Ped	INTSEC TOTAL
Total	0	0	0	0	0	0	0	0	0	0	0	0	0	0	0	0	0
Peak																	0

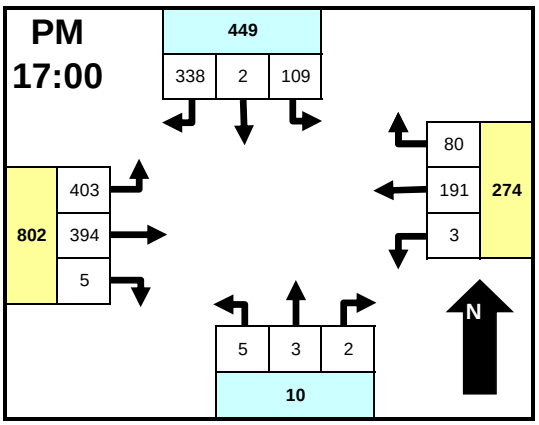

Time	From North 4TH ST LT	Thru	RT	Ped	From East BUTLER AVE LT	Thru	RT	Ped	From South 4TH ST LT	Thru	RT	Ped	From West BUTLER AVE LT	Thru	RT	Ped	INTSEC TOTAL
16:00	27	2	79	0	1	54	20	0	1	2	1	0	83	93	2	0	365
16:15	30	1	71	0	0	60	21	0	4	1	0	0	92	54	4	0	338
16:30	21	1	89	0	0	45	24	0	1	2	0	0	92	76	0	0	351
16:45	28	0	84	0	2	56	22	0	2	3	0	1	78	73	2	3	354
17:00	25	0	88	0	3	50	21	0	5	2	2	0	86	81	1	0	364
17:15	35	1	92	0	0	41	16	0	0	0	0	0	110	112	1	0	408
17:30	28	0	85	0	0	53	19	0	0	1	0	0	103	112	3	0	404
17:45	21	1	73	0	0	47	24	0	0	0	0	0	104	89	0	0	359
Total	215	6	661	0	6	406	167	0	13	11	3	1	748	690	13	3	2943
Peak	109	2	338	0	3	191	80	0	5	3	2	0	403	394	5	0	1535

Intersection Statistics

Per	Peak Hour	Pk Hr Vol	Peak Intvl	Pk Intv Vol
AM				
MID				
PM	5:00 PM	1535	5:15 PM	408

Approach Statistics

Per	Peak Hour	Pk Hr Vol	Peak Hour	Pk Hr Vol	Peak Hour	Pk Hr Vol	Peak Hour	Pk Hr Vol
AM								
MID								
PM	4:45 PM	466	4:00 PM	305	4:15 PM	23	5:00 PM	802

Comments

Approach & Departure Volumes (No Peds)

Per	Approach	Depart	Approach	Depart	Approach	Depart	Approach	Depart
AM	0	0	0	0	0	0	0	0
MID	0	0	0	0	0	0	0	0
PM	882	926	579	908	27	25	1451	1080

TRAFFIC RESEARCH & ANALYSIS, INC.
Specializing in Traffic Data Collection

Traffic Research & Analysis, Inc.
3844 East Indian School Road
Phoenix, AZ 85018
(602) 840-1500

Intersection TMC: 1300123
Count Date: 3/12/2013

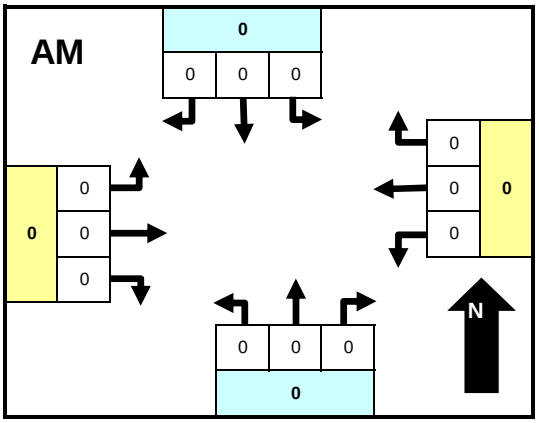

Time	From North 4TH ST LT	Thru	RT	Ped	From East INDUSTRIAL DR LT	Thru	RT	Ped	From South 4TH ST LT	Thru	RT	Ped	From West HUNTINGTON DR LT	Thru	RT	Ped	INTSEC TOTAL
Total	0	0	0	0	0	0	0	0	0	0	0	0	0	0	0	0	0
Peak																	0

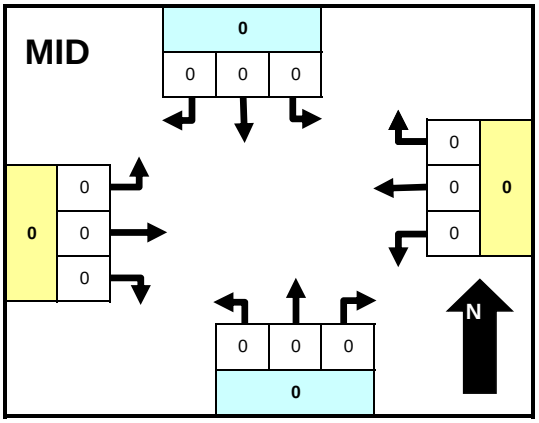

Time	LT	Thru	RT	Ped	LT	Thru	RT	Ped	LT	Thru	RT	Ped	LT	Thru	RT	Ped	TOTAL
Total	0	0	0	0	0	0	0	0	0	0	0	0	0	0	0	0	0
Peak																	0

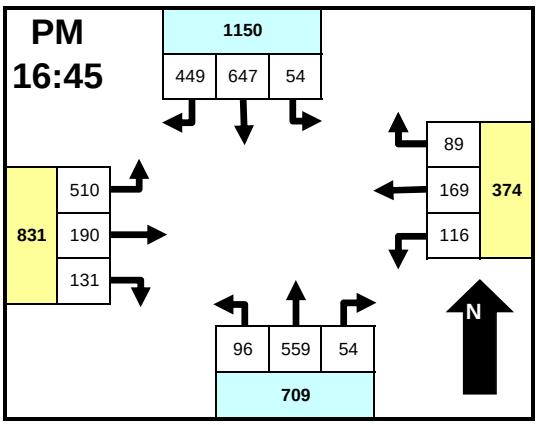

Time	LT	Thru	RT	Ped	LT	Thru	RT	Ped	LT	Thru	RT	Ped	LT	Thru	RT	Ped	TOTAL
16:00	12	129	104	2	23	33	13	0	20	128	23	0	123	42	25	0	677
16:15	11	136	88	0	12	35	16	1	17	153	18	1	105	31	16	1	641
16:30	7	122	112	0	25	52	9	0	30	142	18	0	99	42	25	0	683
16:45	16	137	102	0	20	43	17	0	22	147	19	0	117	53	40	1	734
17:00	13	154	139	0	32	58	34	1	23	117	17	0	126	44	26	2	786
17:15	15	191	107	0	37	28	12	0	28	141	12	0	122	44	36	1	774
17:30	10	165	101	0	27	40	26	1	23	154	6	0	145	49	29	1	777
17:45	12	158	97	0	21	35	14	1	19	159	11	0	119	36	37	5	724
Total	96	1192	850	2	197	324	141	4	182	1141	124	1	956	341	234	11	5796
Peak	54	647	449	0	116	169	89	2	96	559	54	0	510	190	131	5	3071

Intersection Statistics

Per	Peak Hour	Pk Hr Vol	Peak Intvl	Pk Intv Vol
AM				
MID				
PM	4:45 PM	3071	5:00 PM	786

Approach Statistics

Per	Peak Hour	Pk Hr Vol	Peak Hour	Pk Hr Vol	Peak Hour	Pk Hr Vol	Peak Hour	Pk Hr Vol
AM								
MID								
PM	5:00 PM	1162	4:45 PM	376	4:00 PM	738	4:45 PM	836

Comments

Approach & Departure Volumes (No Peds)

Per	Approach	Depart	Approach	Depart	Approach	Depart	Approach	Depart
AM	0	0	0	0	0	0	0	0
MID	0	0	0	0	0	0	0	0
PM	2138	2238	662	561	1447	1623	1531	1356

TRAFFIC RESEARCH & ANALYSIS, INC.
Specializing in Traffic Data Collection

Traffic Research & Analysis, Inc.
3844 East Indian School Road
Phoenix, AZ 85018
(602) 840-1500

Intersection TMC: 1300124
Count Date: 3/12/2013

AM

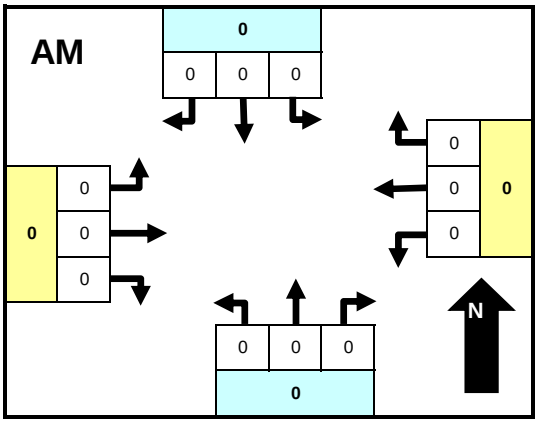

Time	From North PONDEROSA PKWY LT	Thru	RT	Ped	From East HUNTINGTON DR LT	Thru	RT	Ped	From South BUTLER AVE LT	Thru	RT	Ped	From West BUTLER AVE LT	Thru	RT	Ped	INTSEC TOTAL
Total	0	0	0	0	0	0	0	0	0	0	0	0	0	0	0	0	0
Peak																	0

MID

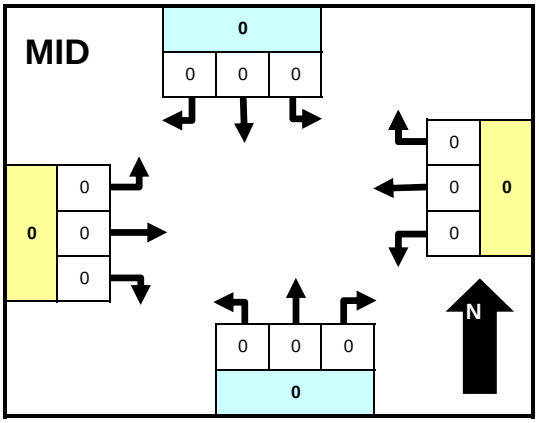

Time	LT	Thru	RT	Ped	LT	Thru	RT	Ped	LT	Thru	RT	Ped	LT	Thru	RT	Ped	TOTAL
Total	0	0	0	0	0	0	0	0	0	0	0	0	0	0	0	0	0
Peak																	0

PM 17:00

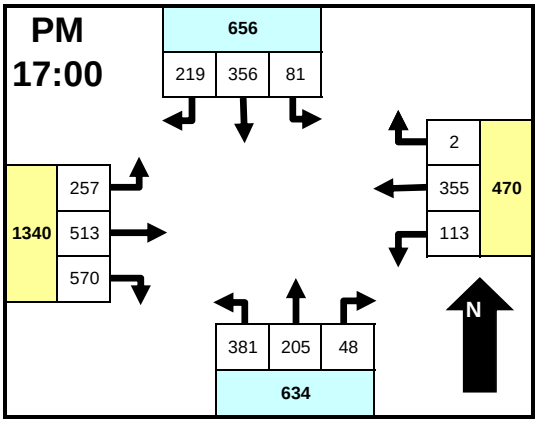

Time	LT	Thru	RT	Ped	LT	Thru	RT	Ped	LT	Thru	RT	Ped	LT	Thru	RT	Ped	TOTAL
16:00	19	79	45	1	35	85	3	0	102	48	16	1	73	133	172	0	812
16:15	14	82	48	0	24	85	3	0	86	50	13	0	67	84	129	0	685
16:30	21	64	48	0	20	104	0	0	112	51	10	0	59	121	110	0	720
16:45	11	59	49	0	31	94	1	1	105	49	11	0	53	116	120	0	700
17:00	25	107	65	0	35	84	0	0	112	55	10	0	64	114	154	0	825
17:15	19	91	49	0	34	70	1	0	102	61	19	0	68	132	148	0	794
17:30	22	82	46	1	21	104	0	2	103	36	8	1	66	140	134	0	766
17:45	15	76	59	0	23	97	1	2	64	53	11	0	59	127	134	0	721
Total	146	640	409	2	223	723	9	5	786	403	98	2	509	967	1101	0	6023
Peak	81	356	219	1	113	355	2	4	381	205	48	1	257	513	570	0	3106

Intersection Statistics

Per	Peak Hour	Pk Hr Vol	Peak Intvl	Pk Intv Vol
AM				
MID				
PM	5:00 PM	3106	5:00 PM	825

Approach Statistics

Per	Peak Hour	Pk Hr Vol	Peak Hour	Pk Hr Vol	Peak Hour	Pk Hr Vol	Peak Hour	Pk Hr Vol
AM								
MID								
PM	5:00 PM	657	4:00 PM	486	4:30 PM	697	5:00 PM	1340

Comments

Approach & Departure Volumes (No Peds)

Per	Approach	Depart	Approach	Depart	Approach	Depart	Approach	Depart
AM	0	0	0	0	0	0	0	0
MID	0	0	0	0	0	0	0	0
PM	1195	921	955	1211	1287	1964	2577	1918

TRAFFIC RESEARCH & ANALYSIS, INC.
Specializing in Traffic Data Collection

Traffic Research & Analysis, Inc.
3844 East Indian School Road
Phoenix, AZ 85018
(602) 840-1500

Intersection TMC: 1300125
Count Date: 3/12/2013

AM

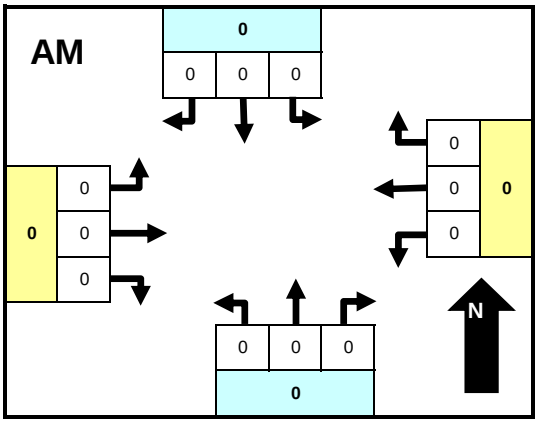

Time	From North I-40 SB LT	Thru	RT	Ped	From East BUTLER AVE LT	Thru	RT	Ped	From South I-40 SB LT	Thru	RT	Ped	From West BUTLER AVE LT	Thru	RT	Ped	INTSEC TOTAL
Total	0	0	0	0	0	0	0	0	0	0	0	0	0	0	0	0	0
Peak																	0

MID

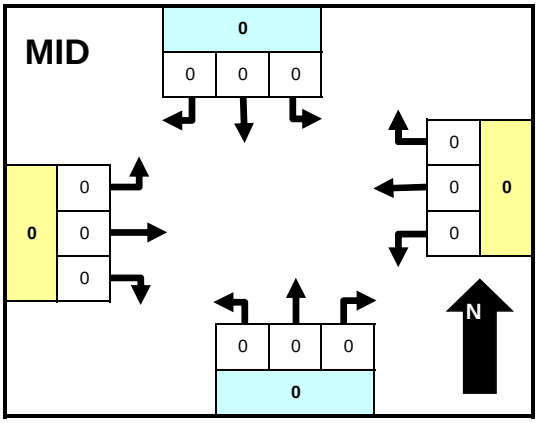

Time	LT	Thru	RT	Ped	LT	Thru	RT	Ped	LT	Thru	RT	Ped	LT	Thru	RT	Ped	TOTAL
Total	0	0	0	0	0	0	0	0	0	0	0	0	0	0	0	0	0
Peak																	0

PM 16:45

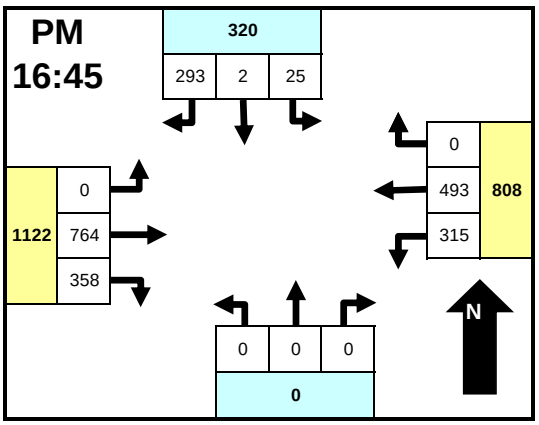

Time	LT	Thru	RT	Ped	LT	Thru	RT	Ped	LT	Thru	RT	Ped	LT	Thru	RT	Ped	TOTAL
16:00	3	1	46	2	75	103	0	0	0	0	0	0	0	182	63	0	475
16:15	9	0	59	1	72	118	0	0	0	0	0	0	0	156	74	0	489
16:30	9	1	52	1	71	114	0	0	0	0	0	0	0	145	60	1	454
16:45	6	1	74	1	77	129	0	0	0	0	0	3	0	159	69	0	519
17:00	9	0	71	0	80	121	0	0	0	0	0	1	0	198	96	0	576
17:15	4	0	82	0	75	134	0	0	0	0	0	1	0	229	107	0	632
17:30	6	1	66	0	83	109	0	0	0	0	0	1	0	178	86	0	530
17:45	7	0	60	0	74	104	0	0	0	0	0	0	0	163	77	3	488
Total	53	4	510	5	607	932	0	0	0	0	0	6	0	1410	632	4	4163
Peak	25	2	293	1	315	493	0	0	0	0	0	6	0	764	358	0	2257

Intersection Statistics

Per	Peak Hour	Pk Hr Vol	Peak Intvl	Pk Intv Vol
AM				
MID				
PM	4:45 PM	2257	5:15 PM	632

Approach Statistics

Per	Peak Hour	Pk Hr Vol	Peak Hour	Pk Hr Vol	Peak Hour	Pk Hr Vol	Peak Hour	Pk Hr Vol
AM								
MID								
PM	4:45 PM	321	4:45 PM	808	4:45 PM	6	5:00 PM	1137

Comments

Approach & Departure Volumes (No Peds)

Per	Approach	Depart	Approach	Depart	Approach	Depart	Approach	Depart
AM	0	0	0	0	0	0	0	0
MID	0	0	0	0	0	0	0	0
PM	567	0	1539	1463	0	1243	2042	1442

TRAFFIC RESEARCH & ANALYSIS, INC.
Specializing in Traffic Data Collection

Traffic Research & Analysis, Inc.
3844 East Indian School Road
Phoenix, AZ 85018
(602) 840-1500

Intersection TMC: 1300126
Count Date: 3/12/2013

AM

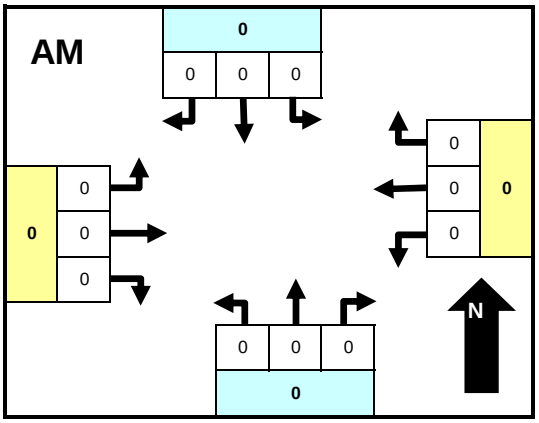

Time	From North I-40 NB LT	Thru	RT	Ped	From East BUTLER AVE LT	Thru	RT	Ped	From South I-40 NB LT	Thru	RT	Ped	From West BUTLER AVE LT	Thru	RT	Ped	INTSEC TOTAL
Total	0	0	0	0	0	0	0	0	0	0	0	0	0	0	0	0	0
Peak																	0

MID

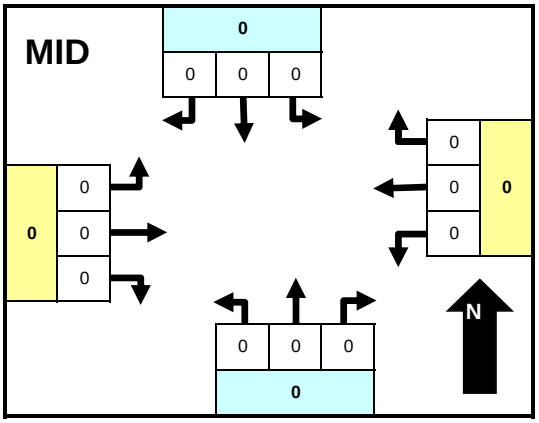

Time	LT	Thru	RT	Ped	LT	Thru	RT	Ped	LT	Thru	RT	Ped	LT	Thru	RT	Ped	TOTAL
Total	0	0	0	0	0	0	0	0	0	0	0	0	0	0	0	0	0
Peak																	0

PM 17:00

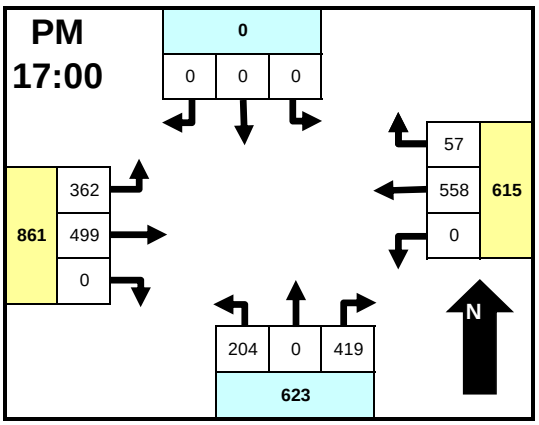

Time	LT	Thru	RT	Ped	LT	Thru	RT	Ped	LT	Thru	RT	Ped	LT	Thru	RT	Ped	TOTAL
16:00	0	0	0	2	0	148	15	0	44	0	95	2	79	125	0	2	512
16:15	0	0	0	2	0	141	8	0	55	0	90	0	71	97	0	0	464
16:30	0	0	0	1	0	127	9	0	59	0	108	0	75	107	0	3	489
16:45	0	0	0	0	0	154	14	0	52	0	66	2	67	103	0	2	460
17:00	0	0	0	1	0	144	22	0	54	0	97	2	90	119	0	2	531
17:15	0	0	0	0	0	140	11	0	69	0	113	2	109	140	0	2	586
17:30	0	0	0	0	0	138	13	1	37	0	108	1	95	118	0	1	512
17:45	0	0	0	5	0	136	11	0	44	0	101	0	68	122	0	0	487
Total	0	0	0	11	0	1128	103	1	414	0	778	9	654	931	0	12	4041
Peak	0	0	0	6	0	558	57	1	204	0	419	5	362	499	0	5	2116

Intersection Statistics

Per	Peak Hour	Pk Hr Vol	Peak Intvl	Pk Intv Vol
AM				
MID				
PM	5:00 PM	2116	5:15 PM	586

Approach Statistics

Per	Peak Hour	Pk Hr Vol	Peak Hour	Pk Hr Vol	Peak Hour	Pk Hr Vol	Peak Hour	Pk Hr Vol
AM								
MID								
PM	5:00 PM	6	4:45 PM	637	5:00 PM	628	5:00 PM	866

Comments

Approach & Departure Volumes (No Peds)

Per	Approach	Depart	Approach	Depart	Approach	Depart	Approach	Depart
AM	0	0	0	0	0	0	0	0
MID	0	0	0	0	0	0	0	0
PM	0	757	1231	1709	1192	0	1585	1542

TRAFFIC RESEARCH & ANALYSIS, INC.
Specializing in Traffic Data Collection

Traffic Research & Analysis, Inc.
3844 East Indian School Road
Phoenix, AZ 85018
(602) 840-1500

Intersection TMC: 1300127
Count Date: 3/12/2013

AM

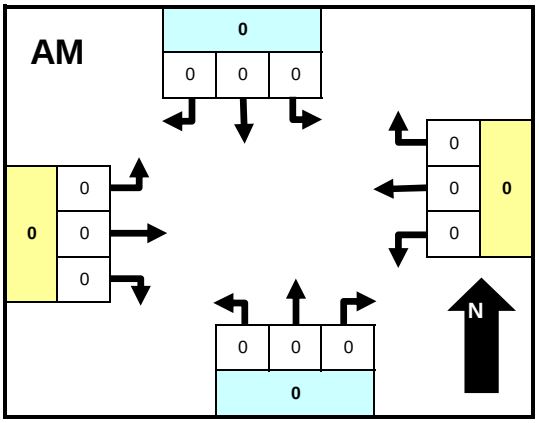

	From North				From East				From South				From West				INTSEC
	NONE				BUTLER AVE				HEROLD RANCH RD				BUTLER AVE				
Time	LT	Thru	RT	Ped	LT	Thru	RT	Ped	LT	Thru	RT	Ped	LT	Thru	RT	Ped	TOTAL
Total	0	0	0	0	0	0	0	0	0	0	0	0	0	0	0	0	0
Peak																	0

MID

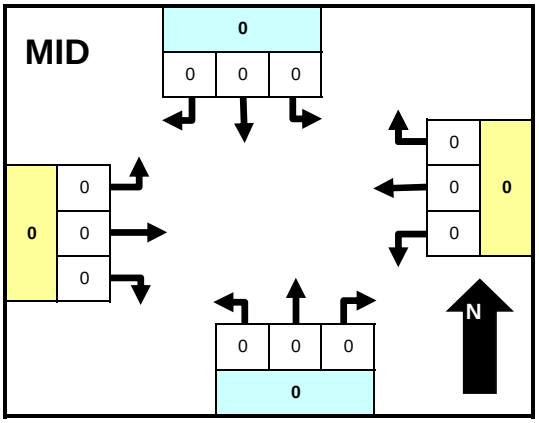

Time	LT	Thru	RT	Ped	LT	Thru	RT	Ped	LT	Thru	RT	Ped	LT	Thru	RT	Ped	TOTAL
Total	0	0	0	0	0	0	0	0	0	0	0	0	0	0	0	0	0
Peak																	0

PM 17:00

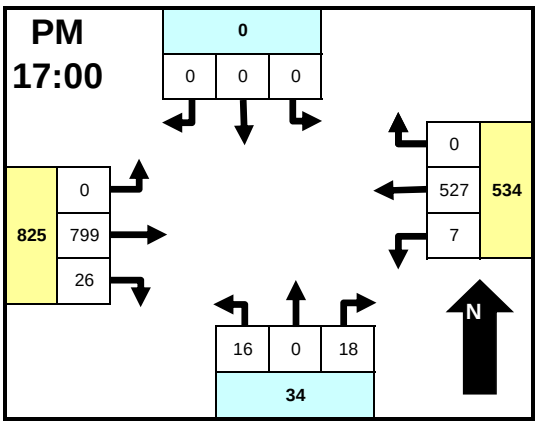

Time	LT	Thru	RT	Ped	LT	Thru	RT	Ped	LT	Thru	RT	Ped	LT	Thru	RT	Ped	TOTAL
16:00	0	0	0	0	3	124	0	0	0	0	1	0	0	167	4	0	299
16:15	0	0	0	1	2	129	0	0	1	0	1	0	0	147	10	0	291
16:30	0	0	0	3	2	129	0	0	1	0	1	1	0	165	8	0	310
16:45	0	0	0	0	1	146	0	0	2	0	2	0	0	142	9	1	303
17:00	0	0	0	0	2	140	0	0	1	0	5	0	0	177	7	0	332
17:15	0	0	0	0	2	128	0	0	7	0	9	2	0	212	8	0	368
17:30	0	0	0	0	3	135	0	0	8	0	3	0	0	214	8	0	371
17:45	0	0	0	0	0	124	0	0	0	0	1	0	0	196	3	0	324
Total	0	0	0	4	15	1055	0	0	20	0	23	3	0	1420	57	1	2598
Peak	0	0	0	0	7	527	0	0	16	0	18	2	0	799	26	0	1395

Intersection Statistics

Per	Peak Hour	Pk Hr Vol	Peak Intvl	Pk Intv Vol
AM				
MID				
PM	5:00 PM	1395	5:30 PM	371

Approach Statistics

Per	Peak Hour	Pk Hr Vol	Peak Hour	Pk Hr Vol	Peak Hour	Pk Hr Vol	Peak Hour	Pk Hr Vol
AM								
MID								
PM	4:00 PM	4	4:45 PM	557	4:45 PM	39	5:00 PM	825

Comments

Approach & Departure Volumes (No Peds)

Per	Approach	Depart	Approach	Depart	Approach	Depart	Approach	Depart
AM	0	0	0	0	0	0	0	0
MID	0	0	0	0	0	0	0	0
PM	0	0	1070	1443	43	72	1477	1075

TRAFFIC RESEARCH & ANALYSIS, INC.
Specializing in Traffic Data Collection

Traffic Research & Analysis, Inc.
3844 East Indian School Road
Phoenix, AZ 85018
(602) 840-1500

Intersection TMC: 1300128
Count Date: 3/12/2013

AM

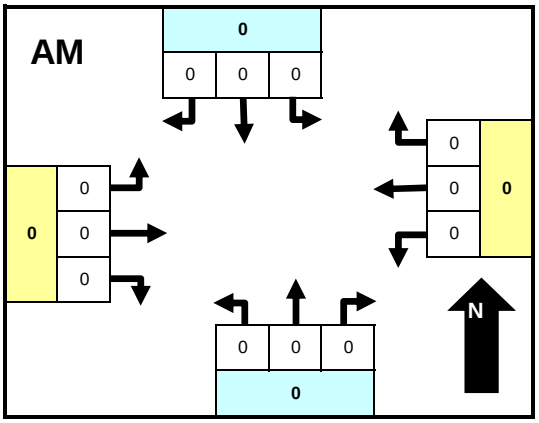

Time	From North 4TH ST LT	Thru	RT	Ped	From East SANTA FE AVE LT	Thru	RT	Ped	From South 4TH ST LT	Thru	RT	Ped	From West SANTA FE AVE LT	Thru	RT	Ped	INTSEC TOTAL
Total	0	0	0	0	0	0	0	0	0	0	0	0	0	0	0	0	0
Peak																	0

MID

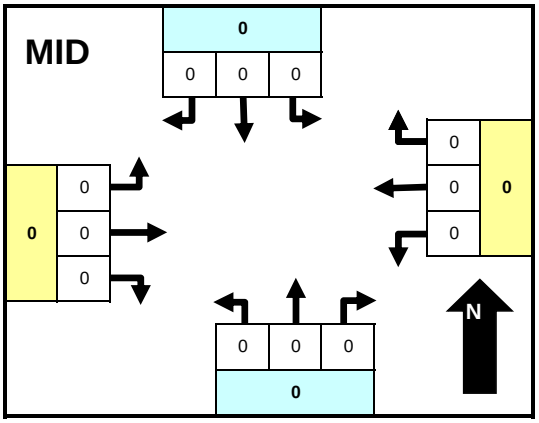

Time	LT	Thru	RT	Ped	LT	Thru	RT	Ped	LT	Thru	RT	Ped	LT	Thru	RT	Ped	TOTAL
Total	0	0	0	0	0	0	0	0	0	0	0	0	0	0	0	0	0
Peak																	0

PM 17:00

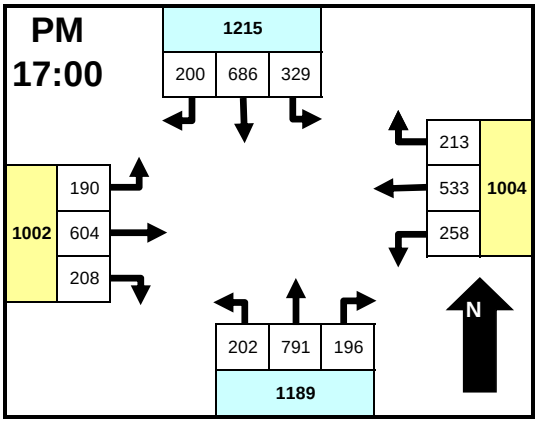

Time	LT	Thru	RT	Ped	LT	Thru	RT	Ped	LT	Thru	RT	Ped	LT	Thru	RT	Ped	TOTAL
16:00	66	162	53	1	78	156	62	0	52	229	94	4	32	158	40	4	1191
16:15	65	121	49	4	43	129	38	4	52	210	68	8	59	123	50	1	1024
16:30	67	173	47	2	72	144	50	0	40	155	44	10	43	137	37	2	1023
16:45	86	165	43	6	41	127	64	6	46	197	54	3	48	130	39	2	1057
17:00	75	211	56	5	66	117	59	5	53	177	45	3	44	145	49	2	1112
17:15	87	165	40	2	64	156	56	4	48	156	56	4	46	152	59	3	1098
17:30	79	148	42	4	72	136	52	1	45	208	49	1	46	172	56	6	1117
17:45	88	162	62	7	56	124	46	6	56	250	46	1	54	135	44	4	1141
Total	613	1307	392	31	492	1089	427	26	392	1582	456	34	372	1152	374	24	8763
Peak	329	686	200	18	258	533	213	16	202	791	196	9	190	604	208	15	4468

Intersection Statistics

Per	Peak Hour	Pk Hr Vol	Peak Intvl	Pk Intv Vol
AM				
MID				
PM	5:00 PM	4468	4:00 PM	1191

Approach Statistics

Per	Peak Hour	Pk Hr Vol	Peak Hour	Pk Hr Vol	Peak Hour	Pk Hr Vol	Peak Hour	Pk Hr Vol
AM								
MID								
PM	5:00 PM	1233	4:30 PM	1031	4:00 PM	1266	5:00 PM	1017

Comments

Approach & Departure Volumes (No Peds)

Per	Approach	Depart	Approach	Depart	Approach	Depart	Approach	Depart
AM	0	0	0	0	0	0	0	0
MID	0	0	0	0	0	0	0	0
PM	2312	2381	2008	2221	2430	2173	1898	1873

TRAFFIC RESEARCH & ANALYSIS, INC.
Specializing in Traffic Data Collection

Traffic Research & Analysis, Inc.
3844 East Indian School Road
Phoenix, AZ 85018
(602) 840-1500

Intersection TMC: P300350
Count Date: 5/29/2013

AM

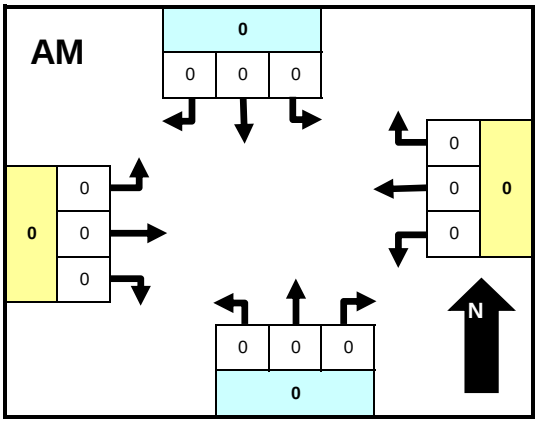

Time	From North 4TH ST LT	Thru	RT	Ped	From East SOLIERE AVE LT	Thru	RT	Ped	From South 4TH ST LT	Thru	RT	Ped	From West SOLIERE AVE LT	Thru	RT	Ped	INTSEC TOTAL
Total	0	0	0	0	0	0	0	0	0	0	0	0	0	0	0	0	0
Peak																	0

MID

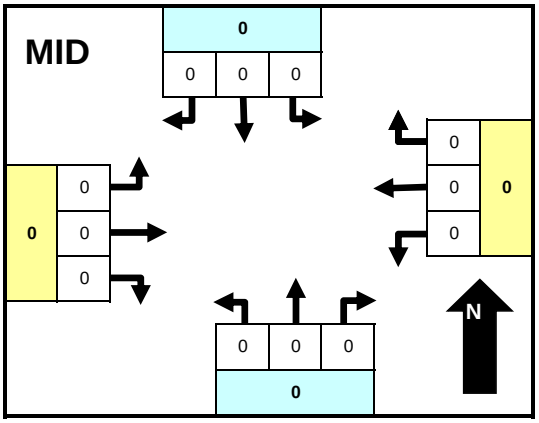

Time	LT	Thru	RT	Ped	LT	Thru	RT	Ped	LT	Thru	RT	Ped	LT	Thru	RT	Ped	TOTAL
Total	0	0	0	0	0	0	0	0	0	0	0	0	0	0	0	0	0
Peak																	0

PM 16:30

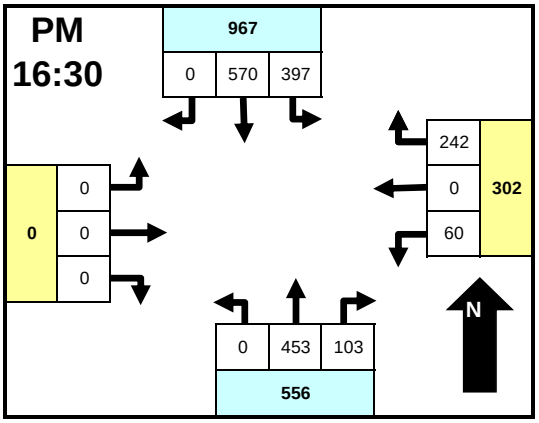

Time	LT	Thru	RT	Ped	LT	Thru	RT	Ped	LT	Thru	RT	Ped	LT	Thru	RT	Ped	TOTAL
16:00	80	115	0	0	12	0	31	0	0	114	16	0	0	0	0	0	368
16:15	67	97	0	0	14	0	41	2	0	107	33	0	0	0	0	1	362
16:30	76	135	0	2	18	0	54	2	0	129	23	0	0	0	0	1	440
16:45	95	147	0	0	15	0	52	0	0	126	21	0	0	0	0	0	456
17:00	126	159	0	0	15	0	71	1	0	104	30	1	0	0	0	6	513
17:15	100	129	0	0	12	0	65	0	0	94	29	0	0	0	0	0	429
17:30	114	129	0	0	15	0	42	3	0	108	20	0	0	0	0	2	433
17:45	111	116	0	1	17	0	55	1	0	99	27	0	0	0	0	0	427
Total	769	1027	0	3	118	0	411	9	0	881	199	1	0	0	0	10	3428
Peak	397	570	0	2	60	0	242	3	0	453	103	1	0	0	0	7	1838

Intersection Statistics

Per	Peak Hour	Pk Hr Vol	Peak Intvl	Pk Intv Vol
AM				
MID				
PM	4:30 PM	1838	5:00 PM	513

Approach Statistics

Per	Peak Hour	Pk Hr Vol	Peak Hour	Pk Hr Vol	Peak Hour	Pk Hr Vol	Peak Hour	Pk Hr Vol
AM								
MID								
PM	4:45 PM	999	4:30 PM	305	4:15 PM	574	4:15 PM	8

Comments

Approach & Departure Volumes (No Peds)

Per	Approach	Depart	Approach	Depart	Approach	Depart	Approach	Depart
AM	0	0	0	0	0	0	0	0
MID	0	0	0	0	0	0	0	0
PM	1796	1292	529	968	1080	1145	0	0

TRAFFIC RESEARCH & ANALYSIS, INC.
Specializing in Traffic Data Collection

Traffic Research & Analysis, Inc.
3844 East Indian School Road
Phoenix, AZ 85018
(602) 840-1500

Intersection TMC: P300351
Count Date: 5/29/2013

AM

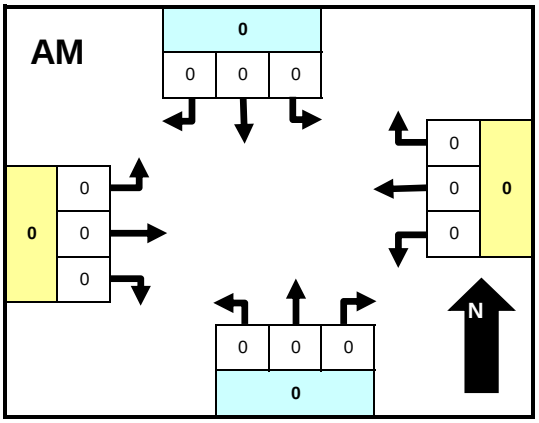

Time	From North 4TH ST LT	Thru	RT	Ped	From East SPARROW AVE LT	Thru	RT	Ped	From South 4TH ST LT	Thru	RT	Ped	From West SPARROW AVE LT	Thru	RT	Ped	INTSEC TOTAL
Total	0	0	0	0	0	0	0	0	0	0	0	0	0	0	0	0	0
Peak																	0

MID

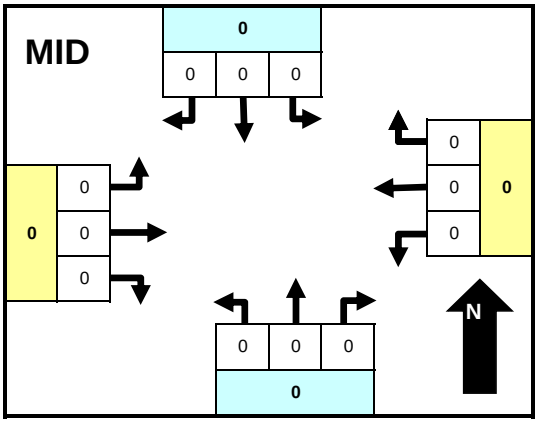

Time	LT	Thru	RT	Ped	LT	Thru	RT	Ped	LT	Thru	RT	Ped	LT	Thru	RT	Ped	TOTAL
Total	0	0	0	0	0	0	0	0	0	0	0	0	0	0	0	0	0
Peak																	0

PM 16:30

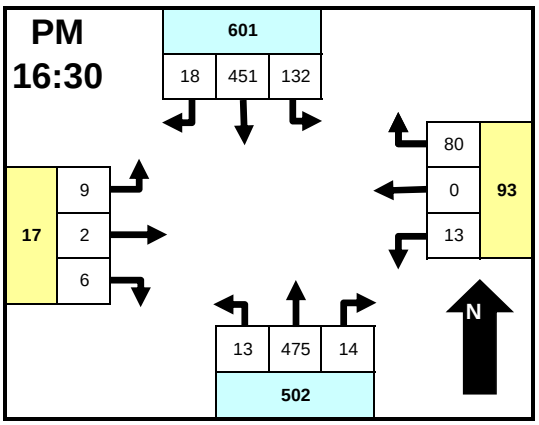

Time	LT	Thru	RT	Ped	LT	Thru	RT	Ped	LT	Thru	RT	Ped	LT	Thru	RT	Ped	TOTAL
16:00	32	91	5	0	3	0	23	0	6	105	3	0	1	0	5	0	274
16:15	20	86	2	2	6	0	12	0	2	127	8	0	2	0	2	0	269
16:30	25	109	6	0	7	0	18	0	0	128	4	0	0	1	0	0	298
16:45	28	124	3	2	3	0	20	0	2	131	1	0	1	0	2	0	317
17:00	33	131	3	0	0	0	27	0	8	103	2	0	5	1	2	0	315
17:15	46	87	6	0	3	0	15	0	3	113	7	0	3	0	2	6	291
17:30	36	96	3	0	2	2	21	0	3	102	7	0	3	0	4	2	281
17:45	41	69	7	0	2	0	25	0	2	107	7	0	1	0	1	0	262
Total	261	793	35	4	26	2	161	0	26	916	39	0	16	2	18	8	2307
Peak	132	451	18	2	13	0	80	0	13	475	14	0	9	2	6	6	1221

Intersection Statistics

Per	Peak Hour	Pk Hr Vol	Peak Intvl	Pk Intv Vol
AM				
MID				
PM	4:30 PM	1221	4:45 PM	317

Approach Statistics

Per	Peak Hour	Pk Hr Vol	Peak Hour	Pk Hr Vol	Peak Hour	Pk Hr Vol	Peak Hour	Pk Hr Vol
AM								
MID								
PM	4:30 PM	603	5:00 PM	97	4:00 PM	517	4:45 PM	31

Comments

Approach & Departure Volumes (No Peds)

Per	Approach	Depart	Approach	Depart	Approach	Depart	Approach	Depart
AM	0	0	0	0	0	0	0	0
MID	0	0	0	0	0	0	0	0
PM	1089	1093	189	302	981	837	36	63

APPENDIX B EXISTING LEVEL OF SERVICE WORKSHEETS

Movement	SEL	SET	SER	NWL	NWT	NWR	NEL	NET	NER	SWL	SWT	SWR
Lane Configurations												
Volume (veh/h)	329	686	200	202	791	196	190	604	208	258	533	213
Number	7	4	14	3	8	18	5	2	12	1	6	16
Initial Q (Qb), veh	0	0	0	0	0	0	0	0	0	0	0	0
Ped-Bike Adj(A_pbT)	1.00		1.00	1.00		1.00	1.00		1.00	1.00		1.00
Parking Bus Adj	1.00	1.00	1.00	1.00	1.00	1.00	1.00	1.00	1.00	1.00	1.00	1.00
Adj Sat Flow veh/h/ln	186.3	186.3	186.3	186.3	186.3	186.3	186.3	186.3	186.3	186.3	186.3	186.3
Lanes	2	2	1	2	2	1	1	2	1	1	2	1
Cap, veh/h	431	1048	445	288	893	380	239	905	385	311	1056	449
Arrive On Green	0.13	0.28	0.28	0.08	0.24	0.24	0.13	0.24	0.24	0.18	0.28	0.28
Sat Flow, veh/h	3442	3725	1583	3442	3725	1583	1774	3725	1583	1774	3725	1583
Grp Volume(v), veh/h	358	746	217	220	860	213	207	657	226	280	579	232
Grp Sat Flow(s),veh/h/ln	1721	1863	1583	1721	1863	1583	1774	1863	1583	1774	1863	1583
Q Serve(g_s), s	10.2	18.1	11.5	6.3	22.9	11.9	11.5	16.3	12.7	15.5	13.3	12.4
Cycle Q Clear(g_c), s	10.2	18.1	11.5	6.3	22.9	11.9	11.5	16.3	12.7	15.5	13.3	12.4
Prop In Lane	1.00		1.00	1.00		1.00	1.00		1.00	1.00		1.00
Lane Grp Cap(c), veh/h	431	1048	445	288	893	380	239	905	385	311	1056	449
V/C Ratio(X)	0.83	0.71	0.49	0.76	0.96	0.56	0.87	0.73	0.59	0.90	0.55	0.52
Avail Cap(c_a), veh/h	856	1048	445	514	893	380	353	1078	458	353	1078	458
HCM Platoon Ratio	1.00	1.00	1.00	1.00	1.00	1.00	1.00	1.00	1.00	1.00	1.00	1.00
Upstream Filter(I)	1.00	1.00	1.00	1.00	1.00	1.00	1.00	1.00	1.00	1.00	1.00	1.00
Uniform Delay (d), s/veh	42.9	32.5	30.1	45.1	37.8	33.6	42.6	35.0	33.6	40.6	30.6	30.2
Incr Delay (d2), s/veh	1.6	2.0	0.3	1.6	21.4	1.2	10.0	1.8	1.1	21.9	0.5	0.7
Initial Q Delay(d3),s/veh	0.0	0.0	0.0	0.0	0.0	0.0	0.0	0.0	0.0	0.0	0.0	0.0
%ile Back of Q (50%), veh/ln	4.6	8.8	4.6	2.8	13.5	4.8	5.8	7.9	5.1	8.9	6.3	5.0
Lane Grp Delay (d), s/veh	44.5	34.4	30.4	46.7	59.2	34.7	52.6	36.8	34.7	62.5	31.0	31.0
Lane Grp LOS	D	C	C	D	E	C	D	D	C	E	C	C
Approach Vol, veh/h		1321			1293			1090			1091	
Approach Delay, s/veh		36.5			53.0			39.3			39.1	
Approach LOS		D			D			D			D	

Timer												
Assigned Phs	7	4		3	8		5	2		1	6	
Phs Duration (G+Y+Rc), s	17.6	34.2		13.4	30.0		18.6	30.3		22.6	34.4	
Change Period (Y+Rc), s	5.0	5.9		5.0	5.9		5.0	5.9		5.0	5.9	
Max Green Setting (Gmax), s	25.0	24.1		15.0	24.1		20.0	29.1		20.0	29.1	
Max Q Clear Time (g_c+I1), s	12.2	20.1		8.3	24.9		13.5	18.3		17.5	15.3	
Green Ext Time (p_c), s	0.4	2.6		0.2	0.0		0.1	6.1		0.1	7.2	

Intersection Summary	
HCM 2010 Ctrl Delay	42.2
HCM 2010 LOS	D

Notes

Movement	SEL	SET	SER	NWL	NWT	NWR	NEL	NET	NER	SWL	SWT	SWR
Lane Configurations												
Volume (veh/h)	54	647	449	96	559	54	510	190	131	116	169	89
Number	7	4	14	3	8	18	5	2	12	1	6	16
Initial Q (Qb), veh	0	0	0	0	0	0	0	0	0	0	0	0
Ped-Bike Adj(A_pbT)	1.00		1.00	1.00		1.00	1.00		1.00	1.00		1.00
Parking Bus Adj	1.00	1.00	1.00	1.00	1.00	1.00	1.00	1.00	1.00	1.00	1.00	1.00
Adj Sat Flow veh/h/ln	186.3	186.3	186.3	186.3	186.3	190.0	186.3	186.3	190.0	186.3	186.3	190.0
Lanes	1	2	1	1	2	0	2	1	0	1	1	0
Cap, veh/h	327	1215	516	282	1131	110	278	278	190	317	302	159
Arrive On Green	0.05	0.33	0.33	0.06	0.34	0.34	0.08	0.27	0.27	0.07	0.26	0.26
Sat Flow, veh/h	1774	3725	1583	1774	3344	324	3442	1031	707	1774	1150	606
Grp Volume(v), veh/h	59	703	488	104	338	329	554	0	349	126	0	281
Grp Sat Flow(s),veh/h/ln	1774	1863	1583	1774	1863	1806	1721	0	1738	1774	0	1756
Q Serve(g_s), s	1.6	11.6	22.3	2.8	10.9	10.9	6.0	0.0	13.6	3.8	0.0	10.4
Cycle Q Clear(g_c), s	1.6	11.6	22.3	2.8	10.9	10.9	6.0	0.0	13.6	3.8	0.0	10.4
Prop In Lane	1.00		1.00	1.00		0.18	1.00		0.41	1.00		0.35
Lane Grp Cap(c), veh/h	327	1215	516	282	630	610	278	0	468	317	0	462
V/C Ratio(X)	0.18	0.58	0.95	0.37	0.54	0.54	1.99	0.00	0.75	0.40	0.00	0.61
Avail Cap(c_a), veh/h	506	1215	516	439	630	610	278	0	1023	567	0	1270
HCM Platoon Ratio	1.00	1.00	1.00	1.00	1.00	1.00	1.00	1.00	1.00	1.00	1.00	1.00
Upstream Filter(I)	1.00	1.00	1.00	1.00	1.00	1.00	1.00	0.00	1.00	1.00	0.00	1.00
Uniform Delay (d), s/veh	15.8	20.8	24.4	15.7	19.9	19.9	34.1	0.0	24.8	18.9	0.0	24.0
Incr Delay (d2), s/veh	0.3	0.7	26.5	0.8	0.9	0.9	458.7	0.0	2.4	0.8	0.0	1.3
Initial Q Delay(d3),s/veh	0.0	0.0	0.0	0.0	0.0	0.0	0.0	0.0	0.0	0.0	0.0	0.0
%ile Back of Q (50%), veh/ln	0.7	5.4	12.2	1.2	5.0	4.9	20.3	0.0	6.1	1.6	0.0	4.6
Lane Grp Delay (d), s/veh	16.1	21.5	50.9	16.5	20.8	20.8	492.9	0.0	27.2	19.7	0.0	25.3
Lane Grp LOS	B	C	D	B	C	C	F		C	B		C
Approach Vol, veh/h		1250			771			903			407	
Approach Delay, s/veh		32.7			20.2			312.9			23.6	
Approach LOS		C			C			F			C	

Timer												
Assigned Phs	7	4		3	8		5	2		1	6	
Phs Duration (G+Y+Rc), s	7.5	30.0		8.4	30.9		10.0	26.3		9.5	25.8	
Change Period (Y+Rc), s	4.0	5.8		4.0	5.8		4.0	6.3		4.0	6.3	
Max Green Setting (Gmax), s	11.0	24.2		11.0	24.2		6.0	43.7		16.0	53.7	
Max Q Clear Time (g_c+I1), s	3.6	24.3		4.8	12.9		8.0	15.6		5.8	12.4	
Green Ext Time (p_c), s	0.1	0.0		0.1	7.6		0.0	4.4		0.2	4.6	

Intersection Summary	
HCM 2010 Ctrl Delay	104.6
HCM 2010 LOS	F

Notes

Movement	EBL	EBT	EBR	WBL	WBT	WBR	NBL	NBT	NBR	SBL	SBT	SBR
Lane Configurations												
Volume (veh/h)	5	958	468	217	771	4	299	12	219	12	6	4
Number	5	2	12	1	6	16	3	8	18	7	4	14
Initial Q (Qb), veh	0	0	0	0	0	0	0	0	0	0	0	0
Ped-Bike Adj(A_pbT)	1.00		1.00	1.00		1.00	1.00		1.00	1.00		1.00
Parking Bus Adj	1.00	1.00	1.00	1.00	1.00	1.00	1.00	1.00	1.00	1.00	1.00	1.00
Adj Sat Flow veh/h/ln	186.3	186.3	186.3	186.3	186.3	186.3	186.3	186.3	186.3	186.3	186.3	186.3
Lanes	1	2	1	1	2	1	2	1	1	1	1	1
Cap, veh/h	367	1512	643	279	2069	879	432	326	277	199	127	108
Arrive On Green	0.01	0.41	0.41	0.16	0.56	0.56	0.13	0.17	0.17	0.02	0.07	0.07
Sat Flow, veh/h	1774	3725	1583	1774	3725	1583	3442	1863	1583	1774	1863	1583
Grp Volume(v), veh/h	5	1041	509	236	838	4	325	13	238	13	7	4
Grp Sat Flow(s),veh/h/ln	1774	1863	1583	1774	1863	1583	1721	1863	1583	1774	1863	1583
Q Serve(g_s), s	0.1	18.7	22.8	10.5	10.5	0.1	7.4	0.5	11.8	0.5	0.3	0.2
Cycle Q Clear(g_c), s	0.1	18.7	22.8	10.5	10.5	0.1	7.4	0.5	11.8	0.5	0.3	0.2
Prop In Lane	1.00		1.00	1.00		1.00	1.00		1.00	1.00		1.00
Lane Grp Cap(c), veh/h	367	1512	643	279	2069	879	432	326	277	199	127	108
V/C Ratio(X)	0.01	0.69	0.79	0.85	0.40	0.00	0.75	0.04	0.86	0.07	0.06	0.04
Avail Cap(c_a), veh/h	594	1788	760	569	2069	879	1104	446	379	406	216	184
HCM Platoon Ratio	1.00	1.00	1.00	1.00	1.00	1.00	1.00	1.00	1.00	1.00	1.00	1.00
Upstream Filter(I)	1.00	1.00	1.00	1.00	1.00	1.00	1.00	1.00	1.00	1.00	1.00	1.00
Uniform Delay (d), s/veh	14.0	19.8	21.1	33.2	10.3	8.0	34.2	27.8	32.5	34.0	35.3	35.3
Incr Delay (d2), s/veh	0.0	0.9	4.9	2.7	0.1	0.0	2.0	0.0	12.5	0.1	0.1	0.1
Initial Q Delay(d3),s/veh	0.0	0.0	0.0	0.0	0.0	0.0	0.0	0.0	0.0	0.0	0.0	0.0
%ile Back of Q (50%), veh/ln	0.1	8.6	9.4	4.9	4.5	0.0	3.3	0.2	5.6	0.2	0.1	0.1
Lane Grp Delay (d), s/veh	14.0	20.7	26.0	35.9	10.5	8.0	36.2	27.8	45.0	34.1	35.4	35.3
Lane Grp LOS	B	C	C	D	B	A	D	C	D	C	D	D
Approach Vol, veh/h		1555			1078			576			24	
Approach Delay, s/veh		22.4			16.0			39.7			34.7	
Approach LOS		C			B			D			C	

Timer												
Assigned Phs	5	2		1	6		3	8		7	4	
Phs Duration (G+Y+Rc), s	4.6	39.0		16.8	51.1		14.2	19.8		5.5	11.1	
Change Period (Y+Rc), s	4.0	6.1		4.0	6.1		4.0	5.6		4.0	5.6	
Max Green Setting (Gmax), s	11.0	38.9		26.0	38.9		26.0	19.4		11.0	9.4	
Max Q Clear Time (g_c+I1), s	2.1	24.8		12.5	12.5		9.4	13.8		2.5	2.3	
Green Ext Time (p_c), s	0.0	8.1		0.3	18.5		0.8	0.3		0.0	0.4	

Intersection Summary	
HCM 2010 Ctrl Delay	23.5
HCM 2010 LOS	C

Notes

Movement	EBL	EBT	EBR	WBL	WBT	WBR	NBL	NBT	NBR	SBL	SBT	SBR
Lane Configurations												
Volume (veh/h)	1	1271	112	58	947	2	133	1	114	4	0	1
Number	5	2	12	1	6	16	3	8	18	7	4	14
Initial Q (Qb), veh	0	0	0	0	0	0	0	0	0	0	0	0
Ped-Bike Adj(A_pbT)	1.00		1.00	1.00		1.00	1.00		1.00	1.00		1.00
Parking Bus Adj	1.00	1.00	1.00	1.00	1.00	1.00	1.00	1.00	1.00	1.00	1.00	1.00
Adj Sat Flow veh/h/ln	186.3	186.3	190.0	186.3	186.3	190.0	186.3	186.3	190.0	190.0	186.3	190.0
Lanes	1	2	0	1	2	0	1	1	0	0	1	0
Cap, veh/h	3	1893	166	314	2313	4	221	2	196	173	0	43
Arrive On Green	0.00	0.56	0.56	0.06	0.62	0.62	0.12	0.12	0.12	0.12	0.00	0.12
Sat Flow, veh/h	1774	3376	297	1774	3717	7	1774	13	1573	1386	0	346
Grp Volume(v), veh/h	1	760	744	63	516	515	145	0	125	5	0	0
Grp Sat Flow(s),veh/h/ln	1774	1863	1810	1774	1863	1861	1774	0	1585	1732	0	0
Q Serve(g_s), s	0.0	19.3	19.5	0.7	9.2	9.2	5.0	0.0	4.8	0.2	0.0	0.0
Cycle Q Clear(g_c), s	0.0	19.3	19.5	0.7	9.2	9.2	5.0	0.0	4.8	0.2	0.0	0.0
Prop In Lane	1.00		0.16	1.00		0.00	1.00		0.99	0.80		0.20
Lane Grp Cap(c), veh/h	3	1044	1015	314	1159	1159	221	0	198	216	0	0
V/C Ratio(X)	0.34	0.73	0.73	0.20	0.44	0.44	0.66	0.00	0.63	0.02	0.00	0.00
Avail Cap(c_a), veh/h	306	1141	1109	508	1159	1159	669	0	598	245	0	0
HCM Platoon Ratio	1.00	1.00	1.00	1.00	1.00	1.00	1.00	1.00	1.00	1.00	1.00	1.00
Upstream Filter(I)	1.00	1.00	1.00	1.00	1.00	1.00	1.00	0.00	1.00	1.00	0.00	0.00
Uniform Delay (d), s/veh	31.7	10.4	10.4	8.8	6.3	6.3	26.6	0.0	26.5	24.5	0.0	0.0
Incr Delay (d2), s/veh	57.6	2.1	2.3	0.3	0.3	0.3	1.2	0.0	1.2	0.0	0.0	0.0
Initial Q Delay(d3),s/veh	0.0	0.0	0.0	0.0	0.0	0.0	0.0	0.0	0.0	0.0	0.0	0.0
%ile Back of Q (50%), veh/ln	0.1	8.0	7.9	0.4	3.5	3.5	2.2	0.0	1.9	0.1	0.0	0.0
Lane Grp Delay (d), s/veh	89.3	12.5	12.8	9.2	6.5	6.5	27.8	0.0	27.7	24.5	0.0	0.0
Lane Grp LOS	F	B	B	A	A	A	C		C	C		
Approach Vol, veh/h		1505			1094			270			5	
Approach Delay, s/veh		12.7			6.7			27.8			24.5	
Approach LOS		B			A			C			C	

Timer												
Assigned Phs	5	2		1	6			8			4	
Phs Duration (G+Y+Rc), s	4.1	41.7		8.0	45.6			13.9			13.9	
Change Period (Y+Rc), s	4.0	6.0		4.0	6.0			6.0			6.0	
Max Green Setting (Gmax), s	11.0	39.0		11.0	39.0			24.0			9.0	
Max Q Clear Time (g_c+I1), s	2.0	21.5		2.7	11.2			7.0			2.2	
Green Ext Time (p_c), s	0.0	14.2		0.1	21.3			0.6			0.4	

Intersection Summary	
HCM 2010 Ctrl Delay	11.8
HCM 2010 LOS	B

Notes

Movement	EBL	EBT	EBR	WBL	WBT	WBR	NEL	NET	NER	SWL	SWT	SWR
Lane Configurations												
Volume (veh/h)	81	356	219	381	205	48	257	513	570	113	355	2
Number	5	2	12	1	6	16	3	8	18	7	4	14
Initial Q (Qb), veh	0	0	0	0	0	0	0	0	0	0	0	0
Ped-Bike Adj(A_pbT)	1.00		1.00	1.00		1.00	1.00		1.00	1.00		1.00
Parking Bus Adj	1.00	1.00	1.00	1.00	1.00	1.00	1.00	1.00	1.00	1.00	1.00	1.00
Adj Sat Flow veh/h/ln	186.3	186.3	186.3	186.3	186.3	190.0	186.3	186.3	186.3	186.3	186.3	190.0
Lanes	1	1	1	2	2	0	1	2	2	1	2	0
Cap, veh/h	124	460	391	483	932	213	320	1105	1383	153	750	4
Arrive On Green	0.07	0.25	0.25	0.14	0.32	0.32	0.18	0.30	0.30	0.09	0.20	0.20
Sat Flow, veh/h	1774	1863	1583	3442	2937	671	1774	3725	3167	1774	3703	19
Grp Volume(v), veh/h	88	387	238	414	140	135	279	558	620	123	194	194
Grp Sat Flow(s),veh/h/ln	1774	1863	1583	1721	1863	1744	1774	1863	1583	1774	1863	1859
Q Serve(g_s), s	5.0	20.3	13.7	12.1	5.7	5.9	15.7	12.7	14.1	7.0	9.5	9.5
Cycle Q Clear(g_c), s	5.0	20.3	13.7	12.1	5.7	5.9	15.7	12.7	14.1	7.0	9.5	9.5
Prop In Lane	1.00		1.00	1.00		0.38	1.00		1.00	1.00		0.01
Lane Grp Cap(c), veh/h	124	460	391	483	591	553	320	1105	1383	153	377	377
V/C Ratio(X)	0.71	0.84	0.61	0.86	0.24	0.24	0.87	0.51	0.45	0.80	0.51	0.51
Avail Cap(c_a), veh/h	536	677	575	536	591	553	708	2072	2205	276	582	581
HCM Platoon Ratio	1.00	1.00	1.00	1.00	1.00	1.00	1.00	1.00	1.00	1.00	1.00	1.00
Upstream Filter(I)	1.00	1.00	1.00	1.00	1.00	1.00	1.00	1.00	1.00	1.00	1.00	1.00
Uniform Delay (d), s/veh	46.7	36.7	34.3	43.1	25.9	25.9	40.9	29.9	20.2	46.0	36.4	36.4
Incr Delay (d2), s/veh	7.2	6.3	1.5	12.1	0.2	0.2	7.4	0.4	0.2	9.4	1.1	1.1
Initial Q Delay(d3),s/veh	0.0	0.0	0.0	0.0	0.0	0.0	0.0	0.0	0.0	0.0	0.0	0.0
%ile Back of Q (50%), veh/ln	2.5	10.4	5.6	6.2	2.7	2.6	7.8	6.0	5.5	3.6	4.6	4.6
Lane Grp Delay (d), s/veh	54.0	43.0	35.8	55.3	26.1	26.2	48.3	30.2	20.5	55.4	37.5	37.5
Lane Grp LOS	D	D	D	E	C	C	D	C	C	E	D	D
Approach Vol, veh/h		713			689			1457			511	
Approach Delay, s/veh		41.9			43.6			29.5			41.8	
Approach LOS		D			D			C			D	

Timer												
Assigned Phs	5	2		1	6		3	8		7	4	
Phs Duration (G+Y+Rc), s	11.2	33.1		18.4	40.3		22.5	38.3		12.9	28.7	
Change Period (Y+Rc), s	4.0	7.7		4.0	7.7		4.0	7.9		4.0	7.9	
Max Green Setting (Gmax), s	31.0	37.3		16.0	22.3		41.0	57.1		16.0	32.1	
Max Q Clear Time (g_c+I1), s	7.0	22.3		14.1	7.9		17.7	16.1		9.0	11.5	
Green Ext Time (p_c), s	0.2	3.1		0.3	4.3		0.8	11.8		0.2	9.3	

Intersection Summary	
HCM 2010 Ctrl Delay	36.9
HCM 2010 LOS	D

Notes

Movement	EBL	EBT	EBR	WBL	WBT	WBR	NBL	NBT	NBR	SBL	SBT	SBR
Lane Configurations												
Volume (veh/h)	0	764	358	315	493	0	0	0	0	25	2	293
Number	5	2	12	1	6	16				7	4	14
Initial Q (Qb), veh	0	0	0	0	0	0				0	0	0
Ped-Bike Adj(A_pbT)	1.00		1.00	1.00		1.00				1.00		1.00
Parking Bus Adj	1.00	1.00	1.00	1.00	1.00	1.00				1.00	1.00	1.00
Adj Sat Flow veh/h/ln	0.0	186.3	190.0	186.3	186.3	0.0				190.0	186.3	186.3
Lanes	0	2	0	1	2	0				0	1	1
Cap, veh/h	0	1023	477	315	2173	0				515	38	492
Arrive On Green	0.00	0.43	0.43	0.22	1.00	0.00				0.31	0.31	0.31
Sat Flow, veh/h	0	2406	1122	1774	3725	0				1657	123	1583
Grp Volume(v), veh/h	0	642	577	342	536	0				29	0	318
Grp Sat Flow(s),veh/h/ln	0	1863	1665	1774	1863	0				1780	0	1583
Q Serve(g_s), s	0.0	28.7	29.0	10.4	0.0	0.0				1.1	0.0	16.5
Cycle Q Clear(g_c), s	0.0	28.7	29.0	10.4	0.0	0.0				1.1	0.0	16.5
Prop In Lane	0.00		0.67	1.00		0.00				0.93		1.00
Lane Grp Cap(c), veh/h	0	792	708	315	2173	0				553	0	492
V/C Ratio(X)	0.00	0.81	0.82	1.09	0.25	0.00				0.05	0.00	0.65
Avail Cap(c_a), veh/h	0	792	708	315	2173	0				553	0	492
HCM Platoon Ratio	1.00	1.00	1.00	2.00	2.00	1.00				1.00	1.00	1.00
Upstream Filter(I)	0.00	1.00	1.00	1.00	1.00	0.00				1.00	0.00	1.00
Uniform Delay (d), s/veh	0.0	23.9	24.0	34.4	0.0	0.0				23.0	0.0	28.3
Incr Delay (d2), s/veh	0.0	8.8	10.0	75.3	0.3	0.0				0.2	0.0	6.4
Initial Q Delay(d3),s/veh	0.0	0.0	0.0	0.0	0.0	0.0				0.0	0.0	0.0
%ile Back of Q (50%), veh/ln	0.0	14.9	13.7	13.5	0.1	0.0				0.5	0.0	7.3
Lane Grp Delay (d), s/veh	0.0	32.7	34.0	109.8	0.3	0.0				23.1	0.0	34.7
Lane Grp LOS		C	C	F	A					C		C
Approach Vol, veh/h		1219			878						347	
Approach Delay, s/veh		33.3			42.9						33.7	
Approach LOS		C			D						C	

Timer												
Assigned Phs		2		1	6						4	
Phs Duration (G+Y+Rc), s		45.0		15.0	60.0						35.0	
Change Period (Y+Rc), s		4.6		4.6	4.6						5.5	
Max Green Setting (Gmax), s		40.4		10.4	40.4						29.5	
Max Q Clear Time (g_c+I1), s		31.0		12.4	2.0						18.5	
Green Ext Time (p_c), s		3.3		0.0	2.1						0.4	

Intersection Summary			
HCM 2010 Ctrl Delay		36.8	
HCM 2010 LOS		D	

Notes

Movement	EBL	EBT	EBR	WBL	WBT	WBR	NBL	NBT	NBR	SBL	SBT	SBR
Lane Configurations												
Volume (veh/h)	362	499	0	0	558	57	204	0	419	0	0	0
Number	5	2	12	1	6	16	3	8	18			
Initial Q (Qb), veh	0	0	0	0	0	0	0	0	0			
Ped-Bike Adj(A_pbT)	1.00		1.00	1.00		1.00	1.00		1.00			
Parking Bus Adj	1.00	1.00	1.00	1.00	1.00	1.00	1.00	1.00	1.00			
Adj Sat Flow veh/h/ln	186.3	186.3	0.0	0.0	186.3	190.0	190.0	186.3	186.3			
Lanes	1	2	0	0	2	0	0	1	1			
Cap, veh/h	481	2173	0	0	1415	144	553	0	493			
Arrive On Green	0.22	1.00	0.00	0.00	0.43	0.43	0.31	0.00	0.31			
Sat Flow, veh/h	1774	3725	0	0	3326	339	1774	0	1583			
Grp Volume(v), veh/h	393	542	0	0	339	330	222	0	455			
Grp Sat Flow(s),veh/h/ln	1774	1863	0	0	1863	1803	1774	0	1583			
Q Serve(g_s), s	2.0	0.0	0.0	0.0	12.2	12.2	9.4	0.0	26.4			
Cycle Q Clear(g_c), s	2.0	0.0	0.0	0.0	12.2	12.2	9.4	0.0	26.4			
Prop In Lane	1.00		0.00	0.00		0.19	1.00		1.00			
Lane Grp Cap(c), veh/h	481	2173	0	0	792	767	553	0	493			
V/C Ratio(X)	0.82	0.25	0.00	0.00	0.43	0.43	0.40	0.00	0.92			
Avail Cap(c_a), veh/h	481	2173	0	0	792	767	553	0	493			
HCM Platoon Ratio	2.00	2.00	1.00	1.00	1.00	1.00	1.00	1.00	1.00			
Upstream Filter(I)	1.00	1.00	0.00	0.00	1.00	1.00	1.00	0.00	1.00			
Uniform Delay (d), s/veh	26.1	0.0	0.0	0.0	19.2	19.2	25.7	0.0	31.6			
Incr Delay (d2), s/veh	14.3	0.3	0.0	0.0	1.7	1.8	2.2	0.0	25.2			
Initial Q Delay(d3),s/veh	0.0	0.0	0.0	0.0	0.0	0.0	0.0	0.0	0.0			
%ile Back of Q (50%), veh/ln	9.8	0.1	0.0	0.0	5.8	5.7	4.5	0.0	13.8			
Lane Grp Delay (d), s/veh	40.3	0.3	0.0	0.0	20.9	21.0	27.9	0.0	56.8			
Lane Grp LOS	D	A			C	C	C		E			
Approach Vol, veh/h		935			669			677				
Approach Delay, s/veh		17.1			20.9			47.3				
Approach LOS		B			C			D				

Timer												
Assigned Phs	5	2			6			8				
Phs Duration (G+Y+Rc), s	15.0	60.0			45.0			35.0				
Change Period (Y+Rc), s	4.6	4.6			4.6			5.4				
Max Green Setting (Gmax), s	10.4	40.4			40.4			29.6				
Max Q Clear Time (g_c+I1), s	4.0	2.0			14.2			28.4				
Green Ext Time (p_c), s	1.5	2.2			2.1			0.2				

Intersection Summary												
HCM 2010 Ctrl Delay			27.2									
HCM 2010 LOS			C									

Notes

Intersection	
Intersection Delay, s/veh	0.8

Movement	EBL	EBT	EBR	WBL	WBT	WBR	NBL	NBT	NBR	SBL	SBT	SBR
Vol, veh/h	0	799	26	7	527	0	16	0	18	0	0	0
Conflicting Peds, #/hr	0	0	0	0	0	0	0	0	0	0	0	0
Sign Control	Free	Free	Free	Free	Free	Free	Stop	Stop	Stop	Stop	Stop	Stop
RT Channelized	-	-	None	-	-	None	-	-	None	-	-	None
Storage Length	200	-	-	200	-	-	-	-	-	-	-	-
Veh in Median Storage, #	-	0	-	-	0	-	-	0	-	-	0	-
Grade, %	-	0	-	-	0	-	-	0	-	-	0	-
Peak Hour Factor	92	92	92	92	92	92	92	92	92	92	92	92
Heavy Vehicles, %	2	2	2	2	2	2	2	2	2	2	2	2
Mvmt Flow	0	868	28	8	573	0	17	0	20	0	0	0

Major/Minor	Major1			Major2			Minor1			Minor2		
Conflicting Flow All	573	0	0	897	0	0	1471	1471	883	1480	1485	573
Stage 1	-	-	-	-	-	-	883	883	-	588	588	-
Stage 2	-	-	-	-	-	-	588	588	-	892	897	-
Follow-up Headway	2.218	-	-	2.218	-	-	3.518	4.018	3.318	3.518	4.018	3.318
Pot Capacity-1 Maneuver	1000	-	-	757	-	-	105	127	345	104	125	519
Stage 1	-	-	-	-	-	-	340	364	-	495	496	-
Stage 2	-	-	-	-	-	-	495	496	-	337	358	-
Time blocked-Platoon, %		-	-		-	-						
Mov Capacity-1 Maneuver	1000	-	-	757	-	-	104	126	345	97	124	519
Mov Capacity-2 Maneuver	-	-	-	-	-	-	104	126	-	97	124	-
Stage 1	-	-	-	-	-	-	340	364	-	495	491	-
Stage 2	-	-	-	-	-	-	490	491	-	318	358	-

Approach	EB	WB	NB	SB
HCM Control Delay, s	0	0.1	33	0
HCM LOS			D	A

Minor Lane / Major Mvmt	NBLn1	EBL	EBT	EBR	WBL	WBT	WBR	SBLn1
Capacity (veh/h)	165	1000	-	-	757	-	-	0
HCM Lane V/C Ratio	0.224	-	-	-	0.01	-	-	+
HCM Control Delay (s)	33	0	-	-	9.804	-	-	0
HCM Lane LOS	D	A			A			A
HCM 95th %tile Q(veh)	0.824	0	-	-	0.03	-	-	+

Notes

~ : Volume Exceeds Capacity; $: Delay Exceeds 300 Seconds; Error : Computation Not Defined

Movement	EBL	EBT	EBR	WBL	WBT	WBR	NBL	NBT	NBR	SBL	SBT	SBR
Lane Configurations												
Volume (veh/h)	403	394	5	3	191	80	5	3	2	109	2	338
Number	5	2	12	1	6	16	3	8	18	7	4	14
Initial Q (Qb), veh	0	0	0	0	0	0	0	0	0	0	0	0
Ped-Bike Adj(A_pbT)	1.00		1.00	1.00		1.00	1.00		1.00	1.00		1.00
Parking Bus Adj	1.00	1.00	1.00	1.00	1.00	1.00	1.00	1.00	1.00	1.00	1.00	1.00
Adj Sat Flow veh/h/ln	186.3	186.3	190.0	186.3	186.3	186.3	190.0	186.3	190.0	186.3	186.3	190.0
Lanes	1	1	0	1	1	1	0	1	0	1	1	0
Cap, veh/h	595	770	9	356	460	391	171	97	45	298	3	523
Arrive On Green	0.18	0.42	0.42	0.00	0.25	0.25	0.33	0.33	0.33	0.33	0.33	0.33
Sat Flow, veh/h	1774	1837	21	1774	1863	1583	249	292	135	1405	9	1576
Grp Volume(v), veh/h	438	0	433	3	208	87	10	0	0	118	0	369
Grp Sat Flow(s),veh/h/ln	1774	0	1859	1774	1863	1583	675	0	0	1405	0	1585
Q Serve(g_s), s	7.4	0.0	10.7	0.1	5.8	2.7	0.1	0.0	0.0	4.9	0.0	12.3
Cycle Q Clear(g_c), s	7.4	0.0	10.7	0.1	5.8	2.7	12.4	0.0	0.0	17.3	0.0	12.3
Prop In Lane	1.00		0.01	1.00		1.00	0.50		0.20	1.00		0.99
Lane Grp Cap(c), veh/h	595	0	778	356	460	391	313	0	0	298	0	526
V/C Ratio(X)	0.74	0.00	0.56	0.01	0.45	0.22	0.03	0.00	0.00	0.40	0.00	0.70
Avail Cap(c_a), veh/h	1042	0	1367	670	1370	1165	313	0	0	396	0	636
HCM Platoon Ratio	1.00	1.00	1.00	1.00	1.00	1.00	1.00	1.00	1.00	1.00	1.00	1.00
Upstream Filter(I)	1.00	0.00	1.00	1.00	1.00	1.00	1.00	0.00	0.00	1.00	0.00	1.00
Uniform Delay (d), s/veh	10.1	0.0	13.4	17.1	19.4	18.2	14.5	0.0	0.0	25.2	0.0	17.7
Incr Delay (d2), s/veh	1.8	0.0	0.5	0.0	0.5	0.2	0.0	0.0	0.0	0.3	0.0	1.8
Initial Q Delay(d3),s/veh	0.0	0.0	0.0	0.0	0.0	0.0	0.0	0.0	0.0	0.0	0.0	0.0
%ile Back of Q (50%), veh/ln	3.7	0.0	4.6	0.0	2.6	1.0	0.1	0.0	0.0	1.7	0.0	4.8
Lane Grp Delay (d), s/veh	11.9	0.0	13.8	17.1	19.9	18.5	14.5	0.0	0.0	25.5	0.0	19.5
Lane Grp LOS	B		B	B	B	B	B			C		B
Approach Vol, veh/h		871			298			10			487	
Approach Delay, s/veh		12.8			19.5			14.5			21.0	
Approach LOS		B			B			B			C	

Timer												
Assigned Phs	5	2		1	6			8			4	
Phs Duration (G+Y+Rc), s	14.7	30.8		4.2	20.3			25.8			25.8	
Change Period (Y+Rc), s	4.0	5.3		4.0	5.3			5.6			5.6	
Max Green Setting (Gmax), s	26.0	44.7		11.0	44.7			9.4			24.4	
Max Q Clear Time (g_c+I1), s	9.4	12.7		2.1	7.8			14.4			19.3	
Green Ext Time (p_c), s	1.3	3.7		0.0	3.8			0.0			0.9	

Intersection Summary	
HCM 2010 Ctrl Delay	16.4
HCM 2010 LOS	B

Notes

Movement	EBL	EBT	EBR	WBL	WBT	WBR	NBL	NBT	NBR	SBL	SBT	SBR
Lane Configurations												
Volume (veh/h)	9	2	6	13	0	80	13	475	14	132	451	18
Number	7	4	14	3	8	18	5	2	12	1	6	16
Initial Q (Qb), veh	0	0	0	0	0	0	0	0	0	0	0	0
Ped-Bike Adj(A_pbT)	1.00		1.00	1.00		1.00	1.00		1.00	1.00		1.00
Parking Bus Adj	1.00	1.00	1.00	1.00	1.00	1.00	1.00	1.00	1.00	1.00	1.00	1.00
Adj Sat Flow veh/h/ln	190.0	186.3	190.0	186.3	186.3	190.0	186.3	186.3	190.0	186.3	186.3	186.3
Lanes	0	1	0	1	1	0	1	1	0	1	1	1
Cap, veh/h	197	47	116	338	0	386	573	1128	33	530	1287	1094
Arrive On Green	0.24	0.24	0.24	0.24	0.00	0.24	0.63	0.63	0.63	0.03	0.69	0.69
Sat Flow, veh/h	623	191	475	1400	0	1583	886	1801	52	1774	1863	1583
Grp Volume(v), veh/h	19	0	0	14	0	87	14	0	531	143	490	20
Grp Sat Flow(s),veh/h/ln	1289	0	0	1400	0	1583	886	0	1854	1774	1863	1583
Q Serve(g_s), s	0.0	0.0	0.0	1.0	0.0	5.4	0.8	0.0	18.5	3.5	13.6	0.5
Cycle Q Clear(g_c), s	5.5	0.0	0.0	6.4	0.0	5.4	6.4	0.0	18.5	3.5	13.6	0.5
Prop In Lane	0.53		0.37	1.00		1.00	1.00		0.03	1.00		1.00
Lane Grp Cap(c), veh/h	359	0	0	338	0	386	573	0	1160	530	1287	1094
V/C Ratio(X)	0.05	0.00	0.00	0.04	0.00	0.23	0.02	0.00	0.46	0.27	0.38	0.02
Avail Cap(c_a), veh/h	359	0	0	338	0	386	573	0	1160	530	1287	1094
HCM Platoon Ratio	1.00	1.00	1.00	1.00	1.00	1.00	1.00	1.00	1.00	1.00	1.00	1.00
Upstream Filter(I)	1.00	0.00	0.00	1.00	0.00	1.00	1.00	0.00	1.00	1.00	1.00	1.00
Uniform Delay (d), s/veh	35.6	0.0	0.0	39.8	0.0	37.2	11.0	0.0	12.1	9.1	8.0	5.9
Incr Delay (d2), s/veh	0.3	0.0	0.0	0.2	0.0	1.4	0.1	0.0	1.3	1.3	0.9	0.0
Initial Q Delay(d3),s/veh	0.0	0.0	0.0	0.0	0.0	0.0	0.0	0.0	0.0	0.0	0.0	0.0
%ile Back of Q (50%), veh/ln	0.5	0.0	0.0	0.4	0.0	2.3	0.2	0.0	8.4	1.5	6.0	0.2
Lane Grp Delay (d), s/veh	35.9	0.0	0.0	40.0	0.0	38.6	11.1	0.0	13.4	10.4	8.8	6.0
Lane Grp LOS	D			D		D	B		B	B	A	A
Approach Vol, veh/h		19			101			545			653	
Approach Delay, s/veh		35.9			38.8			13.3			9.1	
Approach LOS		D			D			B			A	

Timer					
Assigned Phs		4		8		2		1	6	
Phs Duration (G+Y+Rc), s		34.0		34.0		81.0		8.0	89.0	
Change Period (Y+Rc), s		4.0		4.0		4.0		4.0	4.0	
Max Green Setting (Gmax), s		19.0		30.0		77.0		4.0	77.0	
Max Q Clear Time (g_c+I1), s		7.5		8.4		20.5		5.5	15.6	
Green Ext Time (p_c), s		0.4		0.6		8.7		0.0	8.8	

Intersection Summary	
HCM 2010 Ctrl Delay	13.5
HCM 2010 LOS	B

Notes

Movement	SEL	SET	NWT	NWR	SWL	SWR
Lane Configurations						
Volume (veh/h)	397	570	453	103	60	242
Number	1	6	2	12	3	18
Initial Q (Qb), veh	0	0	0	0	0	0
Ped-Bike Adj(A_pbT)	1.00			1.00	1.00	1.00
Parking Bus Adj	1.00	1.00	1.00	1.00	1.00	1.00
Adj Sat Flow veh/h/ln	167.6	167.6	167.6	167.6	167.6	167.6
Lanes	1	1	1	1	1	1
Cap, veh/h	648	1254	743	632	292	260
Arrive On Green	0.27	0.75	0.44	0.44	0.18	0.18
Sat Flow, veh/h	1597	1676	1676	1425	1597	1425
Grp Volume(v), veh/h	432	620	492	112	65	263
Grp Sat Flow(s),veh/h/ln	1597	1676	1676	1425	1597	1425
Q Serve(g_s), s	11.5	17.0	26.6	5.5	4.0	21.0
Cycle Q Clear(g_c), s	11.5	17.0	26.6	5.5	4.0	21.0
Prop In Lane	1.00			1.00	1.00	1.00
Lane Grp Cap(c), veh/h	648	1254	743	632	292	260
V/C Ratio(X)	0.67	0.49	0.66	0.18	0.22	1.01
Avail Cap(c_a), veh/h	648	1254	743	632	292	260
HCM Platoon Ratio	1.00	1.00	1.00	1.00	1.00	1.00
Upstream Filter(I)	1.00	1.00	1.00	1.00	1.00	1.00
Uniform Delay (d), s/veh	13.6	5.8	25.2	19.3	40.0	47.0
Incr Delay (d2), s/veh	5.4	1.4	4.6	0.6	1.8	58.5
Initial Q Delay(d3),s/veh	0.0	0.0	0.0	0.0	0.0	0.0
%ile Back of Q (50%), veh/ln	6.5	6.3	11.9	2.0	1.8	11.9
Lane Grp Delay (d), s/veh	18.9	7.2	29.8	19.9	41.8	105.5
Lane Grp LOS	B	A	C	B	D	F
Approach Vol, veh/h		1052	604		328	
Approach Delay, s/veh		12.0	28.0		92.9	
Approach LOS		B	C		F	

Timer			
Assigned Phs	1	6	2
Phs Duration (G+Y+Rc), s	35.0	90.0	55.0
Change Period (Y+Rc), s	4.0	4.0	4.0
Max Green Setting (Gmax), s	31.0	86.0	51.0
Max Q Clear Time (g_c+I1), s	13.5	19.0	28.6
Green Ext Time (p_c), s	1.3	10.6	8.4

Intersection Summary	
HCM 2010 Ctrl Delay	30.2
HCM 2010 LOS	C

Notes

APPENDIX C 2020 BACKGROUND LEVEL OF SERVICE WORKSHEETS

Movement	SEL	SET	SER	NWL	NWT	NWR	NEL	NET	NER	SWL	SWT	SWR
Lane Configurations												
Volume (veh/h)	355	735	250	230	850	200	240	695	240	260	615	235
Number	7	4	14	3	8	18	5	2	12	1	6	16
Initial Q (Qb), veh	0	0	0	0	0	0	0	0	0	0	0	0
Ped-Bike Adj(A_pbT)	1.00		1.00	1.00		1.00	1.00		1.00	1.00		1.00
Parking Bus Adj	1.00	1.00	1.00	1.00	1.00	1.00	1.00	1.00	1.00	1.00	1.00	1.00
Adj Sat Flow veh/h/ln	186.3	186.3	186.3	186.3	186.3	186.3	186.3	186.3	186.3	186.3	186.3	186.3
Lanes	2	2	1	2	2	1	2	2	1	2	2	1
Cap, veh/h	446	1239	526	313	1094	465	330	981	417	352	1005	427
Arrive On Green	0.13	0.33	0.33	0.09	0.29	0.29	0.10	0.26	0.26	0.10	0.27	0.27
Sat Flow, veh/h	3442	3725	1583	3442	3725	1583	3442	3725	1583	3442	3725	1583
Grp Volume(v), veh/h	386	799	272	250	924	217	261	755	261	283	668	255
Grp Sat Flow(s),veh/h/ln	1721	1863	1583	1721	1863	1583	1721	1863	1583	1721	1863	1583
Q Serve(g_s), s	11.4	18.9	14.3	7.4	24.1	11.6	7.7	19.4	15.0	8.3	16.5	14.5
Cycle Q Clear(g_c), s	11.4	18.9	14.3	7.4	24.1	11.6	7.7	19.4	15.0	8.3	16.5	14.5
Prop In Lane	1.00		1.00	1.00		1.00	1.00		1.00	1.00		1.00
Lane Grp Cap(c), veh/h	446	1239	526	313	1094	465	330	981	417	352	1005	427
V/C Ratio(X)	0.86	0.65	0.52	0.80	0.84	0.47	0.79	0.77	0.63	0.80	0.66	0.60
Avail Cap(c_a), veh/h	466	1300	552	366	1192	507	732	1084	461	699	1048	445
HCM Platoon Ratio	1.00	1.00	1.00	1.00	1.00	1.00	1.00	1.00	1.00	1.00	1.00	1.00
Upstream Filter(I)	1.00	1.00	1.00	1.00	1.00	1.00	1.00	1.00	1.00	1.00	1.00	1.00
Uniform Delay (d), s/veh	44.1	29.3	27.8	46.1	34.3	29.9	45.7	35.2	33.6	45.4	33.6	32.9
Incr Delay (d2), s/veh	14.3	0.8	0.3	8.6	4.9	0.3	1.6	2.9	1.9	1.6	1.4	1.7
Initial Q Delay(d3),s/veh	0.0	0.0	0.0	0.0	0.0	0.0	0.0	0.0	0.0	0.0	0.0	0.0
%ile Back of Q (50%), veh/ln	5.9	9.0	5.6	3.6	12.2	4.6	3.5	9.5	6.2	3.7	8.0	6.0
Lane Grp Delay (d), s/veh	58.4	30.1	28.1	54.7	39.2	30.2	47.4	38.1	35.5	47.1	35.0	34.6
Lane Grp LOS	E	C	C	D	D	C	D	D	D	D	C	C
Approach Vol, veh/h		1457			1391			1277			1206	
Approach Delay, s/veh		37.2			40.6			39.5			37.7	
Approach LOS		D			D			D			D	

Timer												
Assigned Phs	7	4		3	8		5	2		1	6	
Phs Duration (G+Y+Rc), s	18.4	40.3		14.4	36.3		14.9	33.2		15.6	33.8	
Change Period (Y+Rc), s	5.0	5.9		5.0	5.9		5.0	5.9		5.0	5.9	
Max Green Setting (Gmax), s	14.0	36.1		11.0	33.1		22.0	30.1		21.0	29.1	
Max Q Clear Time (g_c+I1), s	13.4	20.9		9.4	26.1		9.7	21.4		10.3	18.5	
Green Ext Time (p_c), s	0.0	7.0		0.1	4.3		0.3	5.9		0.3	6.8	

Intersection Summary	
HCM 2010 Ctrl Delay	38.8
HCM 2010 LOS	D

Notes

Movement	SEL	SET	SER	NWL	NWT	NWR	NEL	NET	NER	SWL	SWT	SWR
Lane Configurations												
Volume (veh/h)	65	860	455	115	755	85	515	195	155	165	175	100
Number	7	4	14	3	8	18	5	2	12	1	6	16
Initial Q (Qb), veh	0	0	0	0	0	0	0	0	0	0	0	0
Ped-Bike Adj(A_pbT)	1.00		1.00	1.00		1.00	1.00		1.00	1.00		1.00
Parking Bus Adj	1.00	1.00	1.00	1.00	1.00	1.00	1.00	1.00	1.00	1.00	1.00	1.00
Adj Sat Flow veh/h/ln	186.3	186.3	186.3	186.3	186.3	190.0	186.3	186.3	190.0	186.3	186.3	190.0
Lanes	1	2	1	1	2	0	2	1	0	1	1	0
Cap, veh/h	239	1292	549	226	1205	135	643	290	230	344	234	134
Arrive On Green	0.04	0.35	0.35	0.06	0.37	0.37	0.19	0.30	0.30	0.10	0.21	0.21
Sat Flow, veh/h	1774	3725	1583	1774	3292	369	3442	964	764	1774	1112	638
Grp Volume(v), veh/h	71	935	495	125	465	448	560	0	380	179	0	299
Grp Sat Flow(s),veh/h/ln	1774	1863	1583	1774	1863	1798	1721	0	1728	1774	0	1750
Q Serve(g_s), s	2.6	22.6	30.7	4.5	21.8	21.8	16.3	0.0	20.4	8.0	0.0	16.8
Cycle Q Clear(g_c), s	2.6	22.6	30.7	4.5	21.8	21.8	16.3	0.0	20.4	8.0	0.0	16.8
Prop In Lane	1.00		1.00	1.00		0.21	1.00		0.44	1.00		0.36
Lane Grp Cap(c), veh/h	239	1292	549	226	682	658	643	0	519	344	0	368
V/C Ratio(X)	0.30	0.72	0.90	0.55	0.68	0.68	0.87	0.00	0.73	0.52	0.00	0.81
Avail Cap(c_a), veh/h	250	1306	555	255	707	682	766	0	681	345	0	469
HCM Platoon Ratio	1.00	1.00	1.00	1.00	1.00	1.00	1.00	1.00	1.00	1.00	1.00	1.00
Upstream Filter(I)	1.00	1.00	1.00	1.00	1.00	1.00	1.00	0.00	1.00	1.00	0.00	1.00
Uniform Delay (d), s/veh	22.2	29.4	32.0	22.6	27.6	27.6	40.8	0.0	32.4	28.3	0.0	38.9
Incr Delay (d2), s/veh	0.7	2.0	17.8	2.1	2.6	2.7	9.4	0.0	2.8	1.4	0.0	8.3
Initial Q Delay(d3),s/veh	0.0	0.0	0.0	0.0	0.0	0.0	0.0	0.0	0.0	0.0	0.0	0.0
%ile Back of Q (50%), veh/ln	1.2	10.9	14.7	2.0	10.6	10.2	7.9	0.0	9.3	3.7	0.0	8.3
Lane Grp Delay (d), s/veh	22.9	31.4	49.8	24.7	30.2	30.3	50.1	0.0	35.2	29.7	0.0	47.2
Lane Grp LOS	C	C	D	C	C	C	D		D	C		D
Approach Vol, veh/h		1501			1038			940			478	
Approach Delay, s/veh		37.1			29.6			44.1			40.6	
Approach LOS		D			C			D			D	

Timer												
Assigned Phs	7	4		3	8		5	2		1	6	
Phs Duration (G+Y+Rc), s	8.3	41.6		10.3	43.6		23.3	37.3		14.0	28.0	
Change Period (Y+Rc), s	4.0	5.8		4.0	5.8		4.0	6.3		4.0	6.3	
Max Green Setting (Gmax), s	5.0	36.2		8.0	39.2		23.0	40.7		10.0	27.7	
Max Q Clear Time (g_c+I1), s	4.6	32.7		6.5	23.8		18.3	22.4		10.0	18.8	
Green Ext Time (p_c), s	0.0	3.1		0.0	11.8		1.0	4.2		0.0	2.9	

Intersection Summary	
HCM 2010 Ctrl Delay	37.2
HCM 2010 LOS	D

Notes

Movement	EBL	EBT	EBR	WBL	WBT	WBR	NBL	NBT	NBR	SBL	SBT	SBR
Lane Configurations												
Volume (veh/h)	10	1025	510	240	825	5	325	15	240	15	10	5
Number	5	2	12	1	6	16	3	8	18	7	4	14
Initial Q (Qb), veh	0	0	0	0	0	0	0	0	0	0	0	0
Ped-Bike Adj(A_pbT)	1.00		1.00	1.00		1.00	1.00		1.00	1.00		1.00
Parking Bus Adj	1.00	1.00	1.00	1.00	1.00	1.00	1.00	1.00	1.00	1.00	1.00	1.00
Adj Sat Flow veh/h/ln	186.3	186.3	186.3	186.3	186.3	186.3	186.3	186.3	186.3	186.3	186.3	186.3
Lanes	1	2	1	1	2	1	2	1	1	1	1	1
Cap, veh/h	370	1645	699	295	2205	937	430	334	284	191	141	120
Arrive On Green	0.02	0.44	0.44	0.17	0.59	0.59	0.12	0.18	0.18	0.02	0.08	0.08
Sat Flow, veh/h	1774	3725	1583	1774	3725	1583	3442	1863	1583	1774	1863	1583
Grp Volume(v), veh/h	11	1114	554	261	897	5	353	16	261	16	11	5
Grp Sat Flow(s),veh/h/ln	1774	1863	1583	1774	1863	1583	1721	1863	1583	1774	1863	1583
Q Serve(g_s), s	0.3	24.5	30.9	14.8	13.3	0.1	10.3	0.7	16.6	0.8	0.6	0.3
Cycle Q Clear(g_c), s	0.3	24.5	30.9	14.8	13.3	0.1	10.3	0.7	16.6	0.8	0.6	0.3
Prop In Lane	1.00		1.00	1.00		1.00	1.00		1.00	1.00		1.00
Lane Grp Cap(c), veh/h	370	1645	699	295	2205	937	430	334	284	191	141	120
V/C Ratio(X)	0.03	0.68	0.79	0.89	0.41	0.01	0.82	0.05	0.92	0.08	0.08	0.04
Avail Cap(c_a), veh/h	463	1737	738	484	2499	1062	637	334	284	257	141	120
HCM Platoon Ratio	1.00	1.00	1.00	1.00	1.00	1.00	1.00	1.00	1.00	1.00	1.00	1.00
Upstream Filter(I)	1.00	1.00	1.00	1.00	1.00	1.00	1.00	1.00	1.00	1.00	1.00	1.00
Uniform Delay (d), s/veh	15.2	22.9	24.6	41.9	11.3	8.6	43.8	34.9	41.4	42.3	44.1	44.0
Incr Delay (d2), s/veh	0.0	1.0	5.6	6.4	0.1	0.0	4.6	0.0	33.0	0.1	0.1	0.1
Initial Q Delay(d3),s/veh	0.0	0.0	0.0	0.0	0.0	0.0	0.0	0.0	0.0	0.0	0.0	0.0
%ile Back of Q (50%), veh/ln	0.1	11.4	13.0	7.2	5.8	0.0	4.8	0.4	9.3	0.4	0.3	0.1
Lane Grp Delay (d), s/veh	15.2	23.9	30.3	48.3	11.4	8.6	48.4	34.9	74.4	42.3	44.2	44.1
Lane Grp LOS	B	C	C	D	B	A	D	C	E	D	D	D
Approach Vol, veh/h		1679			1163			630			32	
Approach Delay, s/veh		25.9			19.7			58.8			43.3	
Approach LOS		C			B			E			D	

Timer												
Assigned Phs	5	2		1	6		3	8		7	4	
Phs Duration (G+Y+Rc), s	5.6	51.4		21.1	66.9		16.8	24.0		6.2	13.4	
Change Period (Y+Rc), s	4.0	6.1		4.0	6.1		4.0	5.6		4.0	5.6	
Max Green Setting (Gmax), s	7.0	47.9		28.0	68.9		19.0	18.4		6.0	5.4	
Max Q Clear Time (g_c+I1), s	2.3	32.9		16.8	15.3		12.3	18.6		2.8	2.6	
Green Ext Time (p_c), s	0.0	12.5		0.3	31.7		0.6	0.0		0.0	0.2	

Intersection Summary	
HCM 2010 Ctrl Delay	29.9
HCM 2010 LOS	C

Notes

Movement	EBL	EBT	EBR	WBL	WBT	WBR	NBL	NBT	NBR	SBL	SBT	SBR
Lane Configurations												
Volume (veh/h)	5	1315	120	65	980	5	140	5	120	5	0	5
Number	5	2	12	1	6	16	3	8	18	7	4	14
Initial Q (Qb), veh	0	0	0	0	0	0	0	0	0	0	0	0
Ped-Bike Adj(A_pbT)	1.00		1.00	1.00		1.00	1.00		1.00	1.00		1.00
Parking Bus Adj	1.00	1.00	1.00	1.00	1.00	1.00	1.00	1.00	1.00	1.00	1.00	1.00
Adj Sat Flow veh/h/ln	186.3	186.3	190.0	186.3	186.3	190.0	186.3	186.3	190.0	190.0	186.3	190.0
Lanes	1	2	0	1	2	0	1	1	0	0	1	0
Cap, veh/h	14	2086	189	311	2490	12	202	7	174	95	0	95
Arrive On Green	0.01	0.62	0.62	0.06	0.67	0.67	0.11	0.11	0.11	0.11	0.00	0.11
Sat Flow, veh/h	1774	3367	305	1774	3705	17	1774	59	1533	837	0	837
Grp Volume(v), veh/h	5	787	772	71	535	535	152	0	135	10	0	0
Grp Sat Flow(s),veh/h/ln	1774	1863	1809	1774	1863	1860	1774	0	1592	1673	0	0
Q Serve(g_s), s	0.2	21.6	22.0	0.8	10.3	10.3	6.4	0.0	6.4	0.4	0.0	0.0
Cycle Q Clear(g_c), s	0.2	21.6	22.0	0.8	10.3	10.3	6.4	0.0	6.4	0.4	0.0	0.0
Prop In Lane	1.00		0.17	1.00		0.01	1.00		0.96	0.50		0.50
Lane Grp Cap(c), veh/h	14	1154	1121	311	1252	1250	202	0	181	190	0	0
V/C Ratio(X)	0.36	0.68	0.69	0.23	0.43	0.43	0.75	0.00	0.75	0.05	0.00	0.00
Avail Cap(c_a), veh/h	137	1321	1283	341	1321	1319	320	0	287	190	0	0
HCM Platoon Ratio	1.00	1.00	1.00	1.00	1.00	1.00	1.00	1.00	1.00	1.00	1.00	1.00
Upstream Filter(I)	1.00	1.00	1.00	1.00	1.00	1.00	1.00	0.00	1.00	1.00	0.00	0.00
Uniform Delay (d), s/veh	38.3	9.7	9.8	8.8	5.8	5.8	33.3	0.0	33.3	30.7	0.0	0.0
Incr Delay (d2), s/veh	14.6	1.2	1.3	0.4	0.2	0.2	2.2	0.0	2.3	0.1	0.0	0.0
Initial Q Delay(d3),s/veh	0.0	0.0	0.0	0.0	0.0	0.0	0.0	0.0	0.0	0.0	0.0	0.0
%ile Back of Q (50%), veh/ln	0.2	8.9	9.0	0.6	3.9	3.9	2.9	0.0	2.6	0.2	0.0	0.0
Lane Grp Delay (d), s/veh	52.9	10.9	11.1	9.2	6.1	6.1	35.5	0.0	35.6	30.8	0.0	0.0
Lane Grp LOS	D	B	B	A	A	A	D		D	C		
Approach Vol, veh/h		1564			1141			287			10	
Approach Delay, s/veh		11.2			6.3			35.5			30.8	
Approach LOS		B			A			D			C	

Timer												
Assigned Phs	5	2		1	6			8			4	
Phs Duration (G+Y+Rc), s	4.6	54.0		8.7	58.1			14.8			14.8	
Change Period (Y+Rc), s	4.0	6.0		4.0	6.0			6.0			6.0	
Max Green Setting (Gmax), s	6.0	55.0		6.0	55.0			14.0			8.0	
Max Q Clear Time (g_c+I1), s	2.2	24.0		2.8	12.3			8.4			2.4	
Green Ext Time (p_c), s	0.0	24.1		0.0	30.6			0.4			0.4	

Intersection Summary	
HCM 2010 Ctrl Delay	11.7
HCM 2010 LOS	B

Notes

Movement	EBL	EBT	EBR	WBL	WBT	WBR	NEL	NET	NER	SWL	SWT	SWR
Lane Configurations												
Volume (veh/h)	90	410	225	410	240	55	265	515	615	120	360	5
Number	1	6	16	5	2	12	7	4	14	3	8	18
Initial Q (Qb), veh	0	0	0	0	0	0	0	0	0	0	0	0
Ped-Bike Adj(A_pbT)	1.00		0.67	1.00		1.00	1.00		1.00	1.00		1.00
Parking Bus Adj	1.00	1.00	1.00	1.00	1.00	1.00	1.00	1.00	1.00	1.00	1.00	1.00
Adj Sat Flow veh/h/ln	186.3	186.3	186.3	186.3	186.3	190.0	186.3	186.3	186.3	186.3	186.3	190.0
Lanes	1	1	1	2	2	0	1	2	2	1	2	0
Cap, veh/h	129	551	313	528	1108	250	323	947	1291	159	594	8
Arrive On Green	0.07	0.30	0.30	0.15	0.38	0.38	0.18	0.25	0.25	0.09	0.16	0.16
Sat Flow, veh/h	1774	1863	1059	3442	2944	665	1774	3725	3167	1774	3670	47
Grp Volume(v), veh/h	98	446	245	446	163	158	288	560	668	130	198	198
Grp Sat Flow(s),veh/h/ln	1774	1863	1059	1721	1863	1745	1774	1863	1583	1774	1863	1854
Q Serve(g_s), s	6.2	25.3	24.2	14.4	6.8	7.1	18.1	15.0	18.0	8.2	11.4	11.4
Cycle Q Clear(g_c), s	6.2	25.3	24.2	14.4	6.8	7.1	18.1	15.0	18.0	8.2	11.4	11.4
Prop In Lane	1.00		1.00	1.00		0.38	1.00		1.00	1.00		0.03
Lane Grp Cap(c), veh/h	129	551	313	528	701	657	323	947	1291	159	301	300
V/C Ratio(X)	0.76	0.81	0.78	0.84	0.23	0.24	0.89	0.59	0.52	0.82	0.66	0.66
Avail Cap(c_a), veh/h	234	790	449	755	953	893	498	1148	1462	280	345	343
HCM Platoon Ratio	1.00	1.00	1.00	1.00	1.00	1.00	1.00	1.00	1.00	1.00	1.00	1.00
Upstream Filter(I)	1.00	1.00	1.00	1.00	1.00	1.00	1.00	1.00	1.00	1.00	1.00	1.00
Uniform Delay (d), s/veh	51.8	37.2	36.8	46.9	24.3	24.3	45.5	37.3	25.3	50.9	44.8	44.8
Incr Delay (d2), s/veh	8.8	4.2	5.6	6.1	0.2	0.2	12.4	0.6	0.3	9.8	3.7	3.8
Initial Q Delay(d3),s/veh	0.0	0.0	0.0	0.0	0.0	0.0	0.0	0.0	0.0	0.0	0.0	0.0
%ile Back of Q (50%), veh/ln	3.1	12.7	7.0	6.8	3.3	3.1	9.4	7.2	7.2	4.2	5.8	5.8
Lane Grp Delay (d), s/veh	60.7	41.4	42.4	53.0	24.4	24.5	57.9	37.9	25.7	60.7	48.5	48.6
Lane Grp LOS	E	D	D	D	C	C	E	D	C	E	D	D
Approach Vol, veh/h		789			767			1516			526	
Approach Delay, s/veh		44.1			41.1			36.3			51.6	
Approach LOS		D			D			D			D	

Timer												
Assigned Phs	1	6		5	2		7	4		3	8	
Phs Duration (G+Y+Rc), s	12.3	41.4		21.5	50.6		24.7	36.8		14.2	26.3	
Change Period (Y+Rc), s	4.0	7.7		4.0	7.7		4.0	7.9		4.0	7.9	
Max Green Setting (Gmax), s	15.0	48.3		25.0	58.3		32.0	35.1		18.0	21.1	
Max Q Clear Time (g_c+I1), s	8.2	27.3		16.4	9.1		20.1	20.0		10.2	13.4	
Green Ext Time (p_c), s	0.1	6.4		1.1	7.7		0.7	8.1		0.2	5.0	

Intersection Summary	
HCM 2010 Ctrl Delay	41.3
HCM 2010 LOS	D

Notes

Movement	EBL	EBT	EBR	WBL	WBT	WBR	NBL	NBT	NBR	SBL	SBT	SBR
Lane Configurations												
Volume (veh/h)	0	925	360	305	735	0	0	0	0	40	5	295
Number	5	2	12	1	6	16				7	4	14
Initial Q (Qb), veh	0	0	0	0	0	0				0	0	0
Ped-Bike Adj(A_pbT)	1.00		1.00	1.00		1.00				1.00		1.00
Parking Bus Adj	1.00	1.00	1.00	1.00	1.00	1.00				1.00	1.00	1.00
Adj Sat Flow veh/h/ln	0.0	186.3	186.3	186.3	186.3	0.0				186.3	186.3	186.3
Lanes	0	3	1	2	2	0				1	0	2
Cap, veh/h	0	2612	740	994	2447	0				420	0	750
Arrive On Green	0.00	0.47	0.00	0.05	0.22	0.00				0.24	0.00	0.24
Sat Flow, veh/h	0	5588	1583	3442	3725	0				1774	0	3167
Grp Volume(v), veh/h	0	1005	0	332	799	0				30	0	338
Grp Sat Flow(s),veh/h/ln	0	1863	1583	1721	1863	0				1774	0	1583
Q Serve(g_s), s	0.0	11.1	0.0	0.0	17.2	0.0				1.2	0.0	8.7
Cycle Q Clear(g_c), s	0.0	11.1	0.0	0.0	17.2	0.0				1.2	0.0	8.7
Prop In Lane	0.00		1.00	1.00		0.00				1.00		1.00
Lane Grp Cap(c), veh/h	0	2612	740	994	2447	0				420	0	750
V/C Ratio(X)	0.00	0.38	0.00	0.33	0.33	0.00				0.07	0.00	0.45
Avail Cap(c_a), veh/h	0	2612	740	994	2447	0				420	0	750
HCM Platoon Ratio	1.00	1.00	1.00	0.33	0.33	1.00				1.00	1.00	1.00
Upstream Filter(I)	0.00	1.00	0.00	1.00	1.00	0.00				1.00	0.00	1.00
Uniform Delay (d), s/veh	0.0	16.4	0.0	22.4	19.5	0.0				28.1	0.0	31.0
Incr Delay (d2), s/veh	0.0	0.4	0.0	0.9	0.4	0.0				0.3	0.0	2.0
Initial Q Delay(d3),s/veh	0.0	0.0	0.0	0.0	0.0	0.0				0.0	0.0	0.0
%ile Back of Q (50%), veh/ln	0.0	5.0	0.0	3.5	8.8	0.0				0.6	0.0	3.6
Lane Grp Delay (d), s/veh	0.0	16.9	0.0	23.3	19.8	0.0				28.5	0.0	32.9
Lane Grp LOS		B		C	B					C		C
Approach Vol, veh/h		1005			1131						368	
Approach Delay, s/veh		16.9			20.9						32.6	
Approach LOS		B			C						C	

Timer												
Assigned Phs		2		1	6						4	
Phs Duration (G+Y+Rc), s		49.0		18.0	67.0						28.0	
Change Period (Y+Rc), s		4.6		4.6	4.6						5.5	
Max Green Setting (Gmax), s		44.4		13.4	62.4						22.5	
Max Q Clear Time (g_c+I1), s		13.1		2.0	19.2						10.7	
Green Ext Time (p_c), s		4.2		2.9	3.6						0.5	

Intersection Summary	
HCM 2010 Ctrl Delay	21.0
HCM 2010 LOS	C

Notes

User approved volume balancing among the lanes for turning movement.

Movement	EBL	EBT	EBR	WBL	WBT	WBR	NBL	NBT	NBR	SBL	SBT	SBR
Lane Configurations												
Volume (veh/h)	350	615	0	0	780	70	260	0	545	0	0	0
Number	5	2	12	1	6	16	3	8	18			
Initial Q (Qb), veh	0	0	0	0	0	0	0	0	0			
Ped-Bike Adj(A_pbT)	1.00		1.00	1.00		1.00	1.00		1.00			
Parking Bus Adj	1.00	1.00	1.00	1.00	1.00	1.00	1.00	1.00	1.00			
Adj Sat Flow veh/h/ln	186.3	186.3	0.0	0.0	186.3	186.3	186.3	186.3	186.3			
Lanes	2	2	0	0	3	1	1	0	2			
Cap, veh/h	1103	2094	0	0	1612	457	590	0	1053			
Arrive On Green	0.07	0.19	0.00	0.00	0.29	0.00	0.33	0.00	0.33			
Sat Flow, veh/h	3442	3725	0	0	5588	1583	1774	0	3167			
Grp Volume(v), veh/h	380	668	0	0	848	0	189	0	693			
Grp Sat Flow(s),veh/h/ln	1721	1863	0	0	1863	1583	1774	0	1583			
Q Serve(g_s), s	0.7	14.7	0.0	0.0	12.1	0.0	7.6	0.0	17.8			
Cycle Q Clear(g_c), s	0.7	14.7	0.0	0.0	12.1	0.0	7.6	0.0	17.8			
Prop In Lane	1.00		0.00	0.00		1.00	1.00		1.00			
Lane Grp Cap(c), veh/h	1103	2094	0	0	1612	457	590	0	1053			
V/C Ratio(X)	0.34	0.32	0.00	0.00	0.53	0.00	0.32	0.00	0.66			
Avail Cap(c_a), veh/h	1103	2094	0	0	1612	457	590	0	1053			
HCM Platoon Ratio	0.33	0.33	1.00	1.00	1.00	1.00	1.00	1.00	1.00			
Upstream Filter(I)	1.00	1.00	0.00	0.00	1.00	0.00	1.00	0.00	1.00			
Uniform Delay (d), s/veh	31.0	22.9	0.0	0.0	28.4	0.0	23.7	0.0	27.1			
Incr Delay (d2), s/veh	0.9	0.4	0.0	0.0	1.2	0.0	1.4	0.0	3.2			
Initial Q Delay(d3),s/veh	0.0	0.0	0.0	0.0	0.0	0.0	0.0	0.0	0.0			
%ile Back of Q (50%), veh/ln	4.6	7.6	0.0	0.0	5.8	0.0	3.5	0.0	7.4			
Lane Grp Delay (d), s/veh	31.9	23.3	0.0	0.0	29.6	0.0	25.1	0.0	30.3			
Lane Grp LOS	C	C			C		C		C			
Approach Vol, veh/h		1048			848			882				
Approach Delay, s/veh		26.4			29.6			29.2				
Approach LOS		C			C			C				

Timer												
Assigned Phs	5	2			6			8				
Phs Duration (G+Y+Rc), s	26.0	58.0			32.0			37.0				
Change Period (Y+Rc), s	4.6	4.6			4.6			5.4				
Max Green Setting (Gmax), s	21.4	53.4			27.4			31.6				
Max Q Clear Time (g_c+I1), s	2.7	16.7			14.1			19.8				
Green Ext Time (p_c), s	2.8	3.0			2.9			1.2				

Intersection Summary												
HCM 2010 Ctrl Delay			28.3									
HCM 2010 LOS			C									

Notes

User approved volume balancing among the lanes for turning movement.

Intersection	
Intersection Delay, s/veh	1.2

Movement	EBL	EBT	EBR	WBL	WBT	WBR	NBL	NBT	NBR	SBL	SBT	SBR
Vol, veh/h	0	945	30	10	680	0	20	0	20	0	0	0
Conflicting Peds, #/hr	0	0	0	0	0	0	0	0	0	0	0	0
Sign Control	Free	Free	Free	Free	Free	Free	Stop	Stop	Stop	Stop	Stop	Stop
RT Channelized	-	-	None	-	-	None	-	-	None	-	-	None
Storage Length	200	-	-	200	-	-	-	-	-	-	-	-
Veh in Median Storage, #	-	0	-	-	0	-	-	0	-	-	0	-
Grade, %	-	0	-	-	0	-	-	0	-	-	0	-
Peak Hour Factor	92	92	92	92	92	92	92	92	92	92	92	92
Heavy Vehicles, %	2	2	2	2	2	2	2	2	2	2	2	2
Mvmt Flow	0	1027	33	11	739	0	22	0	22	0	0	0

Major/Minor	Major1			Major2			Minor1		
Conflicting Flow All	739	0	0	1060	0	0	1804	1804	1043
Stage 1	-	-	-	-	-	-	1043	1043	-
Stage 2	-	-	-	-	-	-	761	761	-
Follow-up Headway	2.218	-	-	2.218	-	-	3.518	4.018	3.318
Pot Capacity-1 Maneuver	867	-	-	657	-	-	87	79	279
Stage 1	-	-	-	-	-	-	339	306	-
Stage 2	-	-	-	-	-	-	461	414	-
Time blocked-Platoon, %		-	-		-	-			
Mov Capacity-1 Maneuver	867	-	-	657	-	-	86	0	279
Mov Capacity-2 Maneuver	-	-	-	-	-	-	86	0	-
Stage 1	-	-	-	-	-	-	339	0	-
Stage 2	-	-	-	-	-	-	453	0	-

Approach	EB	WB	NB
HCM Control Delay, s	0	0.2	45.6
HCM LOS			E

Minor Lane / Major Mvmt	NBLn1	EBL	EBT	EBR	WBL	WBT	WBR
Capacity (veh/h)	131	867	-	-	657	-	-
HCM Lane V/C Ratio	0.332	-	-	-	0.017	-	-
HCM Control Delay (s)	45.6	0	-	-	10.572	-	-
HCM Lane LOS	E	A			B		
HCM 95th %tile Q(veh)	1.329	0	-	-	0.05	-	-

Notes

~ : Volume Exceeds Capacity; $: Delay Exceeds 300 Seconds; Error : Computation Not Defined

Movement	EBL	EBT	EBR	WBL	WBT	WBR	NBL	NBT	NBR	SBL	SBT	SBR
Lane Configurations												
Volume (veh/h)	480	405	5	5	195	85	5	5	5	160	5	420
Number	5	2	12	1	6	16	3	8	18	7	4	14
Initial Q (Qb), veh	0	0	0	0	0	0	0	0	0	0	0	0
Ped-Bike Adj(A_pbT)	1.00		1.00	1.00		1.00	1.00		1.00	1.00		1.00
Parking Bus Adj	1.00	1.00	1.00	1.00	1.00	1.00	1.00	1.00	1.00	1.00	1.00	1.00
Adj Sat Flow veh/h/ln	186.3	186.3	190.0	186.3	186.3	186.3	190.0	186.3	190.0	186.3	186.3	190.0
Lanes	1	1	0	1	1	1	0	1	0	1	1	0
Cap, veh/h	576	743	8	268	336	285	132	131	103	318	7	643
Arrive On Green	0.23	0.40	0.40	0.01	0.18	0.18	0.41	0.41	0.41	0.41	0.41	0.41
Sat Flow, veh/h	1774	1838	21	1774	1863	1583	182	319	251	1399	17	1569
Grp Volume(v), veh/h	522	0	445	5	212	92	15	0	0	174	0	462
Grp Sat Flow(s),veh/h/ln	1774	0	1859	1774	1863	1583	752	0	0	1399	0	1586
Q Serve(g_s), s	15.6	0.0	15.6	0.2	8.8	4.2	0.2	0.0	0.0	9.9	0.0	20.2
Cycle Q Clear(g_c), s	15.6	0.0	15.6	0.2	8.8	4.2	20.4	0.0	0.0	30.2	0.0	20.2
Prop In Lane	1.00		0.01	1.00		1.00	0.33		0.33	1.00		0.99
Lane Grp Cap(c), veh/h	576	0	751	268	336	285	366	0	0	318	0	651
V/C Ratio(X)	0.91	0.00	0.59	0.02	0.63	0.32	0.04	0.00	0.00	0.55	0.00	0.71
Avail Cap(c_a), veh/h	870	0	1043	384	441	375	499	0	0	457	0	808
HCM Platoon Ratio	1.00	1.00	1.00	1.00	1.00	1.00	1.00	1.00	1.00	1.00	1.00	1.00
Upstream Filter(I)	1.00	0.00	1.00	1.00	1.00	1.00	1.00	0.00	0.00	1.00	0.00	1.00
Uniform Delay (d), s/veh	18.6	0.0	19.4	27.6	31.6	29.7	16.2	0.0	0.0	33.1	0.0	20.4
Incr Delay (d2), s/veh	9.3	0.0	0.6	0.0	1.5	0.5	0.0	0.0	0.0	0.5	0.0	1.4
Initial Q Delay(d3),s/veh	0.0	0.0	0.0	0.0	0.0	0.0	0.0	0.0	0.0	0.0	0.0	0.0
%ile Back of Q (50%), veh/ln	12.4	0.0	7.0	0.1	4.2	1.7	0.2	0.0	0.0	3.5	0.0	8.0
Lane Grp Delay (d), s/veh	27.9	0.0	20.0	27.6	33.0	30.2	16.2	0.0	0.0	33.6	0.0	21.8
Lane Grp LOS	C		B	C	C	C	B			C		C
Approach Vol, veh/h		967			309			15			636	
Approach Delay, s/veh		24.2			32.1			16.2			25.1	
Approach LOS		C			C			B			C	

Timer												
Assigned Phs	5	2		1	6			8			4	
Phs Duration (G+Y+Rc), s	23.2	38.9		4.5	20.3			39.7			39.7	
Change Period (Y+Rc), s	4.0	5.3		4.0	5.3			5.6			5.6	
Max Green Setting (Gmax), s	33.0	46.7		6.0	19.7			42.4			42.4	
Max Q Clear Time (g_c+I1), s	17.6	17.6		2.2	10.8			22.4			32.2	
Green Ext Time (p_c), s	1.6	3.8		0.0	2.5			2.4			1.9	

Intersection Summary	
HCM 2010 Ctrl Delay	25.7
HCM 2010 LOS	C

Notes

Movement	EBL	EBT	EBR	WBL	WBT	WBR	NBL	NBT	NBR	SBL	SBT	SBR
Lane Configurations												
Volume (veh/h)	15	5	10	20	5	105	15	735	20	170	705	25
Number	7	4	14	3	8	18	5	2	12	1	6	16
Initial Q (Qb), veh	0	0	0	0	0	0	0	0	0	0	0	0
Ped-Bike Adj(A_pbT)	1.00		1.00	1.00		1.00	1.00		1.00	1.00		1.00
Parking Bus Adj	1.00	1.00	1.00	1.00	1.00	1.00	1.00	1.00	1.00	1.00	1.00	1.00
Adj Sat Flow veh/h/ln	190.0	186.3	190.0	186.3	186.3	190.0	186.3	186.3	190.0	186.3	186.3	186.3
Lanes	0	1	0	1	1	0	1	1	0	1	1	1
Cap, veh/h	97	36	45	158	9	212	502	1192	33	492	1474	1253
Arrive On Green	0.14	0.14	0.14	0.14	0.14	0.14	0.66	0.66	0.66	0.10	0.79	0.79
Sat Flow, veh/h	360	256	323	1392	67	1526	681	1804	50	1774	1863	1583
Grp Volume(v), veh/h	32	0	0	22	0	119	16	0	821	185	766	27
Grp Sat Flow(s),veh/h/ln	939	0	0	1392	0	1593	681	0	1854	1774	1863	1583
Q Serve(g_s), s	0.1	0.0	0.0	1.7	0.0	8.0	1.0	0.0	31.0	3.0	16.8	0.4
Cycle Q Clear(g_c), s	8.1	0.0	0.0	9.8	0.0	8.0	2.7	0.0	31.0	3.0	16.8	0.4
Prop In Lane	0.50		0.34	1.00		0.96	1.00		0.03	1.00		1.00
Lane Grp Cap(c), veh/h	178	0	0	158	0	222	502	0	1225	492	1474	1253
V/C Ratio(X)	0.18	0.00	0.00	0.14	0.00	0.54	0.03	0.00	0.67	0.38	0.52	0.02
Avail Cap(c_a), veh/h	178	0	0	158	0	222	502	0	1225	492	1474	1253
HCM Platoon Ratio	1.00	1.00	1.00	1.00	1.00	1.00	1.00	1.00	1.00	1.00	1.00	1.00
Upstream Filter(I)	1.00	0.00	0.00	1.00	0.00	1.00	1.00	0.00	1.00	1.00	1.00	1.00
Uniform Delay (d), s/veh	43.6	0.0	0.0	50.7	0.0	46.1	7.4	0.0	11.9	9.8	4.3	2.5
Incr Delay (d2), s/veh	2.2	0.0	0.0	1.8	0.0	9.0	0.1	0.0	2.9	2.2	1.3	0.0
Initial Q Delay(d3),s/veh	0.0	0.0	0.0	0.0	0.0	0.0	0.0	0.0	0.0	0.0	0.0	0.0
%ile Back of Q (50%), veh/ln	0.9	0.0	0.0	0.7	0.0	3.8	0.2	0.0	14.0	2.1	6.5	0.1
Lane Grp Delay (d), s/veh	45.8	0.0	0.0	52.5	0.0	55.1	7.5	0.0	14.8	12.0	5.6	2.6
Lane Grp LOS	D			D		E	A		B	B	A	A
Approach Vol, veh/h		32			141			837			978	
Approach Delay, s/veh		45.8			54.7			14.7			6.7	
Approach LOS		D			D			B			A	

Timer					
Assigned Phs		4		8		2		1	6	
Phs Duration (G+Y+Rc), s		20.0		20.0		80.0		15.0	95.0	
Change Period (Y+Rc), s		4.0		4.0		4.0		4.0	4.0	
Max Green Setting (Gmax), s		16.0		16.0		76.0		11.0	91.0	
Max Q Clear Time (g_c+I1), s		10.1		11.8		33.0		5.0	18.8	
Green Ext Time (p_c), s		0.4		0.3		17.8		0.2	20.5	

Intersection Summary	
HCM 2010 Ctrl Delay	14.1
HCM 2010 LOS	B

Notes

Movement	SEL	SET	NWT	NWR	SWL	SWR
Lane Configurations						
Volume (veh/h)	430	685	865	145	85	260
Number	1	6	2	12	3	18
Initial Q (Qb), veh	0	0	0	0	0	0
Ped-Bike Adj(A_pbT)	1.00			1.00	1.00	1.00
Parking Bus Adj	1.00	1.00	1.00	1.00	1.00	1.00
Adj Sat Flow veh/h/ln	186.3	186.3	186.3	186.3	186.3	186.3
Lanes	1	1	1	1	1	1
Cap, veh/h	490	1474	988	840	247	220
Arrive On Green	0.23	0.79	0.53	0.53	0.14	0.14
Sat Flow, veh/h	1774	1863	1863	1583	1774	1583
Grp Volume(v), veh/h	467	745	940	158	92	283
Grp Sat Flow(s),veh/h/ln	1774	1863	1863	1583	1774	1583
Q Serve(g_s), s	23.9	16.0	55.0	6.0	5.4	16.0
Cycle Q Clear(g_c), s	23.9	16.0	55.0	6.0	5.4	16.0
Prop In Lane	1.00			1.00	1.00	1.00
Lane Grp Cap(c), veh/h	490	1474	988	840	247	220
V/C Ratio(X)	0.95	0.51	0.95	0.19	0.37	1.28
Avail Cap(c_a), veh/h	490	1474	988	840	247	220
HCM Platoon Ratio	1.00	1.00	1.00	1.00	1.00	1.00
Upstream Filter(I)	1.00	1.00	1.00	1.00	1.00	1.00
Uniform Delay (d), s/veh	36.3	4.2	25.6	14.1	44.9	49.5
Incr Delay (d2), s/veh	30.4	1.2	19.0	0.5	4.3	158.0
Initial Q Delay(d3),s/veh	0.0	0.0	0.0	0.0	0.0	0.0
%ile Back of Q (50%), veh/ln	11.4	6.3	29.8	2.4	2.8	16.2
Lane Grp Delay (d), s/veh	66.7	5.4	44.6	14.6	49.2	207.5
Lane Grp LOS	E	A	D	B	D	F
Approach Vol, veh/h		1212	1098		375	
Approach Delay, s/veh		29.0	40.3		168.7	
Approach LOS		C	D		F	

Timer			
Assigned Phs	1	6	2
Phs Duration (G+Y+Rc), s	30.0	95.0	65.0
Change Period (Y+Rc), s	4.0	4.0	4.0
Max Green Setting (Gmax), s	26.0	91.0	61.0
Max Q Clear Time (g_c+I1), s	25.9	18.0	57.0
Green Ext Time (p_c), s	0.0	25.1	3.4

Intersection Summary	
HCM 2010 Ctrl Delay	53.1
HCM 2010 LOS	D

Notes

APPENDIX D 2020 TOTAL LEVEL OF SERVICE WORKSHEETS

Movement	SEL	SET	SER	NWL	NWT	NWR	NEL	NET	NER	SWL	SWT	SWR
Lane Configurations												
Volume (veh/h)	355	805	250	240	915	220	240	695	250	280	615	235
Number	7	4	14	3	8	18	5	2	12	1	6	16
Initial Q (Qb), veh	0	0	0	0	0	0	0	0	0	0	0	0
Ped-Bike Adj(A_pbT)	1.00		1.00	1.00		1.00	1.00		1.00	1.00		1.00
Parking Bus Adj	1.00	1.00	1.00	1.00	1.00	1.00	1.00	1.00	1.00	1.00	1.00	1.00
Adj Sat Flow veh/h/ln	186.3	186.3	186.3	186.3	186.3	186.3	186.3	186.3	186.3	186.3	186.3	186.3
Lanes	2	2	1	2	2	1	2	2	1	2	2	1
Cap, veh/h	444	1265	538	323	1134	482	327	947	402	371	995	423
Arrive On Green	0.13	0.34	0.34	0.09	0.30	0.30	0.10	0.25	0.25	0.11	0.27	0.27
Sat Flow, veh/h	3442	3725	1583	3442	3725	1583	3442	3725	1583	3442	3725	1583
Grp Volume(v), veh/h	386	875	272	261	995	239	261	755	272	304	668	255
Grp Sat Flow(s),veh/h/ln	1721	1863	1583	1721	1863	1583	1721	1863	1583	1721	1863	1583
Q Serve(g_s), s	11.7	21.6	14.6	7.9	27.0	13.2	7.9	20.2	16.5	9.2	17.1	15.0
Cycle Q Clear(g_c), s	11.7	21.6	14.6	7.9	27.0	13.2	7.9	20.2	16.5	9.2	17.1	15.0
Prop In Lane	1.00		1.00	1.00		1.00	1.00		1.00	1.00		1.00
Lane Grp Cap(c), veh/h	444	1265	538	323	1134	482	327	947	402	371	995	423
V/C Ratio(X)	0.87	0.69	0.51	0.81	0.88	0.50	0.80	0.80	0.68	0.82	0.67	0.60
Avail Cap(c_a), veh/h	452	1265	538	387	1191	506	581	1017	432	678	1122	477
HCM Platoon Ratio	1.00	1.00	1.00	1.00	1.00	1.00	1.00	1.00	1.00	1.00	1.00	1.00
Upstream Filter(I)	1.00	1.00	1.00	1.00	1.00	1.00	1.00	1.00	1.00	1.00	1.00	1.00
Uniform Delay (d), s/veh	45.6	30.4	28.1	47.4	35.2	30.4	47.2	37.2	35.8	46.5	34.9	34.1
Incr Delay (d2), s/veh	15.6	1.4	0.3	8.5	7.0	0.3	1.7	4.1	3.4	1.7	1.2	1.4
Initial Q Delay(d3),s/veh	0.0	0.0	0.0	0.0	0.0	0.0	0.0	0.0	0.0	0.0	0.0	0.0
%ile Back of Q (50%), veh/ln	6.1	10.3	5.8	3.9	13.8	5.2	3.6	10.1	7.0	4.2	8.2	6.1
Lane Grp Delay (d), s/veh	61.2	31.7	28.4	55.9	42.2	30.7	49.0	41.3	39.3	48.3	36.1	35.5
Lane Grp LOS	E	C	C	E	D	C	D	D	D	D	D	D
Approach Vol, veh/h		1533			1495			1288			1227	
Approach Delay, s/veh		38.6			42.7			42.4			39.0	
Approach LOS		D			D			D			D	

Timer												
Assigned Phs	7	4		3	8		5	2		1	6	
Phs Duration (G+Y+Rc), s	18.8	42.1		15.0	38.4		15.1	33.0		16.5	34.4	
Change Period (Y+Rc), s	5.0	5.9		5.0	5.9		5.0	5.9		5.0	5.9	
Max Green Setting (Gmax), s	14.0	36.1		12.0	34.1		18.0	29.1		21.0	32.1	
Max Q Clear Time (g_c+I1), s	13.7	23.6		9.9	29.0		9.9	22.2		11.2	19.1	
Green Ext Time (p_c), s	0.0	6.8		0.1	3.4		0.2	4.9		0.3	7.9	

Intersection Summary	
HCM 2010 Ctrl Delay	40.7
HCM 2010 LOS	D

Notes

Movement	SEL	SET	SER	NWL	NWT	NWR	NEL	NET	NER	SWL	SWT	SWR
Lane Configurations												
Volume (veh/h)	65	960	455	120	845	110	515	195	160	190	175	100
Number	7	4	14	3	8	18	5	2	12	1	6	16
Initial Q (Qb), veh	0	0	0	0	0	0	0	0	0	0	0	0
Ped-Bike Adj(A_pbT)	1.00		1.00	1.00		1.00	1.00		1.00	1.00		1.00
Parking Bus Adj	1.00	1.00	1.00	1.00	1.00	1.00	1.00	1.00	1.00	1.00	1.00	1.00
Adj Sat Flow veh/h/ln	186.3	186.3	186.3	186.3	186.3	190.0	186.3	186.3	190.0	186.3	186.3	190.0
Lanes	1	2	1	1	2	0	2	1	0	1	1	0
Cap, veh/h	211	1325	563	213	1215	159	634	292	240	326	232	133
Arrive On Green	0.04	0.36	0.36	0.06	0.38	0.38	0.18	0.31	0.31	0.08	0.21	0.21
Sat Flow, veh/h	1774	3725	1583	1774	3229	422	3442	948	778	1774	1112	638
Grp Volume(v), veh/h	71	1043	495	130	530	508	560	0	386	207	0	299
Grp Sat Flow(s),veh/h/ln	1774	1863	1583	1774	1863	1788	1721	0	1725	1774	0	1750
Q Serve(g_s), s	2.7	26.6	31.1	4.7	26.3	26.3	16.8	0.0	21.1	9.0	0.0	17.3
Cycle Q Clear(g_c), s	2.7	26.6	31.1	4.7	26.3	26.3	16.8	0.0	21.1	9.0	0.0	17.3
Prop In Lane	1.00		1.00	1.00		0.24	1.00		0.45	1.00		0.36
Lane Grp Cap(c), veh/h	211	1325	563	213	701	673	634	0	531	326	0	365
V/C Ratio(X)	0.34	0.79	0.88	0.61	0.76	0.76	0.88	0.00	0.73	0.63	0.00	0.82
Avail Cap(c_a), veh/h	221	1342	570	220	706	678	714	0	662	326	0	457
HCM Platoon Ratio	1.00	1.00	1.00	1.00	1.00	1.00	1.00	1.00	1.00	1.00	1.00	1.00
Upstream Filter(I)	1.00	1.00	1.00	1.00	1.00	1.00	1.00	0.00	1.00	1.00	0.00	1.00
Uniform Delay (d), s/veh	23.2	30.6	32.0	24.0	28.8	28.8	42.1	0.0	32.7	31.5	0.0	40.1
Incr Delay (d2), s/veh	0.9	3.2	14.5	4.6	4.6	4.8	11.6	0.0	3.0	4.0	0.0	9.2
Initial Q Delay(d3),s/veh	0.0	0.0	0.0	0.0	0.0	0.0	0.0	0.0	0.0	0.0	0.0	0.0
%ile Back of Q (50%), veh/ln	1.2	13.0	14.4	3.8	13.1	12.6	8.4	0.0	9.7	4.7	0.0	8.6
Lane Grp Delay (d), s/veh	24.2	33.7	46.5	28.6	33.5	33.6	53.7	0.0	35.7	35.5	0.0	49.3
Lane Grp LOS	C	C	D	C	C	C	D		D	D		D
Approach Vol, veh/h		1609			1168			946			506	
Approach Delay, s/veh		37.2			33.0			46.4			43.6	
Approach LOS		D			C			D			D	

Timer												
Assigned Phs	7	4		3	8		5	2		1	6	
Phs Duration (G+Y+Rc), s	8.4	43.5		10.6	45.7		23.5	39.0		13.0	28.4	
Change Period (Y+Rc), s	4.0	5.8		4.0	5.8		4.0	6.3		4.0	6.3	
Max Green Setting (Gmax), s	5.0	38.2		7.0	40.2		22.0	40.7		9.0	27.7	
Max Q Clear Time (g_c+I1), s	4.7	33.1		6.7	28.3		18.8	23.1		11.0	19.3	
Green Ext Time (p_c), s	0.0	4.7		0.0	10.1		0.7	4.2		0.0	2.8	

Intersection Summary	
HCM 2010 Ctrl Delay	38.9
HCM 2010 LOS	D

Notes

Movement	EBL	EBT	EBR	WBL	WBT	WBR	NBL	NBT	NBR	SBL	SBT	SBR
Lane Configurations												
Volume (veh/h)	10	1025	585	245	825	5	395	15	245	15	10	5
Number	5	2	12	1	6	16	3	8	18	7	4	14
Initial Q (Qb), veh	0	0	0	0	0	0	0	0	0	0	0	0
Ped-Bike Adj(A_pbT)	1.00		1.00	1.00		1.00	1.00		1.00	1.00		1.00
Parking Bus Adj	1.00	1.00	1.00	1.00	1.00	1.00	1.00	1.00	1.00	1.00	1.00	1.00
Adj Sat Flow veh/h/ln	186.3	186.3	186.3	186.3	186.3	186.3	186.3	186.3	186.3	186.3	186.3	186.3
Lanes	1	2	1	1	2	1	2	1	1	1	1	1
Cap, veh/h	370	1669	709	298	2235	950	501	336	285	165	104	88
Arrive On Green	0.02	0.45	0.45	0.17	0.60	0.60	0.15	0.18	0.18	0.02	0.06	0.06
Sat Flow, veh/h	1774	3725	1583	1774	3725	1583	3442	1863	1583	1774	1863	1583
Grp Volume(v), veh/h	11	1114	636	266	897	5	429	16	266	16	11	5
Grp Sat Flow(s),veh/h/ln	1774	1863	1583	1774	1863	1583	1721	1863	1583	1774	1863	1583
Q Serve(g_s), s	0.4	25.4	39.9	15.8	13.7	0.1	13.1	0.8	17.8	0.9	0.6	0.3
Cycle Q Clear(g_c), s	0.4	25.4	39.9	15.8	13.7	0.1	13.1	0.8	17.8	0.9	0.6	0.3
Prop In Lane	1.00		1.00	1.00		1.00	1.00		1.00	1.00		1.00
Lane Grp Cap(c), veh/h	370	1669	709	298	2235	950	501	336	285	165	104	88
V/C Ratio(X)	0.03	0.67	0.90	0.89	0.40	0.01	0.86	0.05	0.93	0.10	0.11	0.06
Avail Cap(c_a), veh/h	458	1692	719	428	2349	998	639	336	285	227	104	88
HCM Platoon Ratio	1.00	1.00	1.00	1.00	1.00	1.00	1.00	1.00	1.00	1.00	1.00	1.00
Upstream Filter(I)	1.00	1.00	1.00	1.00	1.00	1.00	1.00	1.00	1.00	1.00	1.00	1.00
Uniform Delay (d), s/veh	15.6	23.4	27.4	43.9	11.3	8.6	44.9	36.5	43.5	46.3	48.3	48.2
Incr Delay (d2), s/veh	0.0	1.0	13.9	12.2	0.1	0.0	8.4	0.0	35.6	0.1	0.2	0.1
Initial Q Delay(d3),s/veh	0.0	0.0	0.0	0.0	0.0	0.0	0.0	0.0	0.0	0.0	0.0	0.0
%ile Back of Q (50%), veh/ln	0.2	11.8	18.2	8.2	6.0	0.0	6.4	0.4	10.0	0.4	0.3	0.1
Lane Grp Delay (d), s/veh	15.6	24.4	41.3	56.1	11.5	8.6	53.3	36.5	79.1	46.4	48.5	48.3
Lane Grp LOS	B	C	D	E	B	A	D	D	E	D	D	D
Approach Vol, veh/h		1761			1168			711			32	
Approach Delay, s/veh		30.5			21.6			62.6			47.4	
Approach LOS		C			C			E			D	

Timer												
Assigned Phs	5	2		1	6		3	8		7	4	
Phs Duration (G+Y+Rc), s	5.7	54.3		22.1	70.7		19.7	25.0		6.3	11.6	
Change Period (Y+Rc), s	4.0	6.1		4.0	6.1		4.0	5.6		4.0	5.6	
Max Green Setting (Gmax), s	7.0	48.9		26.0	67.9		20.0	19.4		6.0	5.4	
Max Q Clear Time (g_c+I1), s	2.4	41.9		17.8	15.7		15.1	19.8		2.9	2.6	
Green Ext Time (p_c), s	0.0	6.3		0.3	32.3		0.6	0.0		0.0	0.2	

Intersection Summary	
HCM 2010 Ctrl Delay	34.0
HCM 2010 LOS	C

Notes

Movement	EBL	EBT	EBR	WBL	WBT	WBR	NBL	NBT	NBR	SBL	SBT	SBR
Lane Configurations												
Volume (veh/h)	5	1390	120	80	1050	5	140	5	135	5	0	5
Number	5	2	12	1	6	16	3	8	18	7	4	14
Initial Q (Qb), veh	0	0	0	0	0	0	0	0	0	0	0	0
Ped-Bike Adj(A_pbT)	1.00		1.00	1.00		1.00	1.00		1.00	1.00		1.00
Parking Bus Adj	1.00	1.00	1.00	1.00	1.00	1.00	1.00	1.00	1.00	1.00	1.00	1.00
Adj Sat Flow veh/h/ln	186.3	186.3	190.0	186.3	186.3	190.0	186.3	186.3	190.0	190.0	186.3	190.0
Lanes	1	2	0	1	2	0	1	1	0	0	1	0
Cap, veh/h	14	2115	181	295	2518	11	212	6	184	100	0	100
Arrive On Green	0.01	0.62	0.62	0.06	0.68	0.68	0.12	0.12	0.12	0.12	0.00	0.12
Sat Flow, veh/h	1774	3385	289	1774	3706	16	1774	52	1539	837	0	837
Grp Volume(v), veh/h	5	827	814	87	573	573	152	0	152	10	0	0
Grp Sat Flow(s),veh/h/ln	1774	1863	1812	1774	1863	1860	1774	0	1591	1673	0	0
Q Serve(g_s), s	0.2	24.8	25.4	1.0	11.8	11.8	6.8	0.0	7.7	0.4	0.0	0.0
Cycle Q Clear(g_c), s	0.2	24.8	25.4	1.0	11.8	11.8	6.8	0.0	7.7	0.4	0.0	0.0
Prop In Lane	1.00		0.16	1.00		0.01	1.00		0.97	0.50		0.50
Lane Grp Cap(c), veh/h	14	1164	1132	295	1266	1264	212	0	190	200	0	0
V/C Ratio(X)	0.36	0.71	0.72	0.30	0.45	0.45	0.72	0.00	0.80	0.05	0.00	0.00
Avail Cap(c_a), veh/h	128	1281	1246	312	1281	1280	257	0	230	200	0	0
HCM Platoon Ratio	1.00	1.00	1.00	1.00	1.00	1.00	1.00	1.00	1.00	1.00	1.00	1.00
Upstream Filter(I)	1.00	1.00	1.00	1.00	1.00	1.00	1.00	0.00	1.00	1.00	0.00	0.00
Uniform Delay (d), s/veh	40.9	10.5	10.6	11.0	6.2	6.2	35.1	0.0	35.5	32.3	0.0	0.0
Incr Delay (d2), s/veh	14.8	1.7	1.8	0.6	0.3	0.3	5.1	0.0	12.3	0.1	0.0	0.0
Initial Q Delay(d3),s/veh	0.0	0.0	0.0	0.0	0.0	0.0	0.0	0.0	0.0	0.0	0.0	0.0
%ile Back of Q (50%), veh/ln	0.2	10.6	10.8	0.9	4.5	4.5	3.3	0.0	3.7	0.2	0.0	0.0
Lane Grp Delay (d), s/veh	55.7	12.2	12.4	11.6	6.4	6.4	40.2	0.0	47.8	32.4	0.0	0.0
Lane Grp LOS	E	B	B	B	A	A	D		D	C		
Approach Vol, veh/h		1646			1233			304			10	
Approach Delay, s/veh		12.4			6.8			44.0			32.4	
Approach LOS		B			A			D			C	

Timer												
Assigned Phs	5	2		1	6			8			4	
Phs Duration (G+Y+Rc), s	4.7	57.8		9.2	62.3			15.9			15.9	
Change Period (Y+Rc), s	4.0	6.0		4.0	6.0			6.0			6.0	
Max Green Setting (Gmax), s	6.0	57.0		6.0	57.0			12.0			8.0	
Max Q Clear Time (g_c+I1), s	2.2	27.4		3.0	13.8			9.7			2.4	
Green Ext Time (p_c), s	0.0	24.4		0.0	33.0			0.2			0.4	

Intersection Summary												
HCM 2010 Ctrl Delay			13.3									
HCM 2010 LOS			B									

Notes

HCM 2010 Signalized Intersection Summary
5: Butler Ave & Ponderosa Pkwy & Huntington Dr

6/21/2013

Movement	EBL	EBT	EBR	WBL	WBT	WBR	NEL	NET	NER	SWL	SWT	SWR
Lane Configurations												
Volume (veh/h)	90	490	225	490	315	65	265	515	705	130	360	5
Number	5	2	12	1	6	16	3	8	18	7	4	14
Initial Q (Qb), veh	0	0	0	0	0	0	0	0	0	0	0	0
Ped-Bike Adj(A_pbT)	1.00		1.00	1.00		1.00	1.00		1.00	1.00		1.00
Parking Bus Adj	1.00	1.00	1.00	1.00	1.00	1.00	1.00	1.00	1.00	1.00	1.00	1.00
Adj Sat Flow veh/h/ln	186.3	186.3	186.3	186.3	186.3	190.0	186.3	186.3	186.3	186.3	186.3	190.0
Lanes	1	1	1	2	2	0	1	2	2	1	2	0
Cap, veh/h	124	610	518	597	1293	265	315	856	1276	166	534	7
Arrive On Green	0.07	0.33	0.33	0.17	0.43	0.43	0.18	0.23	0.23	0.09	0.15	0.15
Sat Flow, veh/h	1774	1863	1583	3442	3001	616	1774	3725	3167	1774	3670	47
Grp Volume(v), veh/h	98	533	245	533	211	202	288	560	766	141	198	198
Grp Sat Flow(s),veh/h/ln	1774	1863	1583	1721	1863	1754	1774	1863	1583	1774	1863	1854
Q Serve(g_s), s	7.3	36.1	16.5	20.3	9.7	9.9	21.4	18.3	25.5	10.5	13.6	13.7
Cycle Q Clear(g_c), s	7.3	36.1	16.5	20.3	9.7	9.9	21.4	18.3	25.5	10.5	13.6	13.7
Prop In Lane	1.00		1.00	1.00		0.35	1.00		1.00	1.00		0.03
Lane Grp Cap(c), veh/h	124	610	518	597	802	756	315	856	1276	166	271	270
V/C Ratio(X)	0.79	0.87	0.47	0.89	0.26	0.27	0.91	0.65	0.60	0.85	0.73	0.73
Avail Cap(c_a), veh/h	199	713	606	693	880	829	384	892	1308	212	271	270
HCM Platoon Ratio	1.00	1.00	1.00	1.00	1.00	1.00	1.00	1.00	1.00	1.00	1.00	1.00
Upstream Filter(I)	1.00	1.00	1.00	1.00	1.00	1.00	1.00	1.00	1.00	1.00	1.00	1.00
Uniform Delay (d), s/veh	61.3	42.5	35.9	54.2	24.5	24.5	54.1	46.8	31.5	59.8	54.7	54.7
Incr Delay (d2), s/veh	10.6	10.4	0.7	12.7	0.2	0.2	23.2	1.6	0.7	22.1	9.7	9.8
Initial Q Delay(d3),s/veh	0.0	0.0	0.0	0.0	0.0	0.0	0.0	0.0	0.0	0.0	0.0	0.0
%ile Back of Q (50%), veh/ln	3.7	19.1	6.8	10.2	4.6	4.5	11.9	9.1	10.3	5.9	7.3	7.3
Lane Grp Delay (d), s/veh	71.9	52.9	36.5	66.9	24.7	24.7	77.3	48.4	32.2	81.9	64.4	64.5
Lane Grp LOS	E	D	D	E	C	C	E	D	C	F	E	E
Approach Vol, veh/h		876			946			1614			537	
Approach Delay, s/veh		50.5			48.5			45.9			69.0	
Approach LOS		D			D			D			E	

Timer												
Assigned Phs	5	2		1	6		3	8		7	4	
Phs Duration (G+Y+Rc), s	13.4	51.6		27.2	65.4		27.8	38.7		16.5	27.4	
Change Period (Y+Rc), s	4.0	7.7		4.0	7.7		4.0	7.9		4.0	7.9	
Max Green Setting (Gmax), s	15.0	51.3		27.0	63.3		29.0	32.1		16.0	19.1	
Max Q Clear Time (g_c+I1), s	9.3	38.1		22.3	11.9		23.4	27.5		12.5	15.7	
Green Ext Time (p_c), s	0.1	5.7		0.9	8.7		0.4	3.2		0.1	2.6	

Intersection Summary	
HCM 2010 Ctrl Delay	50.6
HCM 2010 LOS	D

Notes

Movement	EBL	EBT	EBR	WBL	WBT	WBR	NBL	NBT	NBR	SBL	SBT	SBR
Lane Configurations												
Volume (veh/h)	0	1100	360	405	900	0	0	0	0	65	5	295
Number	5	2	12	1	6	16				7	4	14
Initial Q (Qb), veh	0	0	0	0	0	0				0	0	0
Ped-Bike Adj(A_pbT)	1.00		1.00	1.00		1.00				1.00		1.00
Parking Bus Adj	1.00	1.00	1.00	1.00	1.00	1.00				1.00	1.00	1.00
Adj Sat Flow veh/h/ln	0.0	186.3	186.3	186.3	186.3	0.0				186.3	186.3	186.3
Lanes	0	3	1	2	2	0				1	0	2
Cap, veh/h	0	2494	707	1066	2565	0				364	0	650
Arrive On Green	0.00	0.45	0.00	0.06	0.23	0.00				0.21	0.00	0.21
Sat Flow, veh/h	0	5588	1583	3442	3725	0				1774	0	3167
Grp Volume(v), veh/h	0	1196	0	440	978	0				49	0	348
Grp Sat Flow(s),veh/h/ln	0	1863	1583	1721	1863	0				1774	0	1583
Q Serve(g_s), s	0.0	14.3	0.0	0.3	21.1	0.0				2.1	0.0	9.3
Cycle Q Clear(g_c), s	0.0	14.3	0.0	0.3	21.1	0.0				2.1	0.0	9.3
Prop In Lane	0.00		1.00	1.00		0.00				1.00		1.00
Lane Grp Cap(c), veh/h	0	2494	707	1066	2565	0				364	0	650
V/C Ratio(X)	0.00	0.48	0.00	0.41	0.38	0.00				0.13	0.00	0.54
Avail Cap(c_a), veh/h	0	2494	707	1066	2565	0				364	0	650
HCM Platoon Ratio	1.00	1.00	1.00	0.33	0.33	1.00				1.00	1.00	1.00
Upstream Filter(I)	0.00	1.00	0.00	1.00	1.00	0.00				1.00	0.00	1.00
Uniform Delay (d), s/veh	0.0	18.5	0.0	28.5	19.6	0.0				30.9	0.0	33.7
Incr Delay (d2), s/veh	0.0	0.7	0.0	1.2	0.4	0.0				0.8	0.0	3.1
Initial Q Delay(d3),s/veh	0.0	0.0	0.0	0.0	0.0	0.0				0.0	0.0	0.0
%ile Back of Q (50%), veh/ln	0.0	6.6	0.0	5.4	10.8	0.0				1.0	0.0	4.0
Lane Grp Delay (d), s/veh	0.0	19.2	0.0	29.7	20.0	0.0				31.6	0.0	36.8
Lane Grp LOS		B		C	C					C		D
Approach Vol, veh/h		1196			1418						397	
Approach Delay, s/veh		19.2			23.0						36.2	
Approach LOS		B			C						D	

Timer			
Assigned Phs	2	1	6	4
Phs Duration (G+Y+Rc), s	47.0	23.0	70.0	25.0
Change Period (Y+Rc), s	4.6	4.6	4.6	5.5
Max Green Setting (Gmax), s	42.4	18.4	65.4	19.5
Max Q Clear Time (g_c+I1), s	16.3	2.3	23.1	11.3
Green Ext Time (p_c), s	5.2	4.1	4.7	0.4

Intersection Summary	
HCM 2010 Ctrl Delay	23.2
HCM 2010 LOS	C

Notes

User approved volume balancing among the lanes for turning movement.

Movement	EBL	EBT	EBR	WBL	WBT	WBR	NBL	NBT	NBR	SBL	SBT	SBR
Lane Configurations												
Volume (veh/h)	350	815	0	0	1045	95	260	0	655	0	0	0
Number	5	2	12	1	6	16	3	8	18			
Initial Q (Qb), veh	0	0	0	0	0	0	0	0	0			
Ped-Bike Adj(A_pbT)	1.00		1.00	1.00		1.00	1.00		1.00			
Parking Bus Adj	1.00	1.00	1.00	1.00	1.00	1.00	1.00	1.00	1.00			
Adj Sat Flow veh/h/ln	186.3	186.3	0.0	0.0	186.3	186.3	186.3	186.3	186.3			
Lanes	2	2	0	0	3	1	1	0	2			
Cap, veh/h	771	2016	0	0	2024	573	627	0	1120			
Arrive On Green	0.04	0.18	0.00	0.00	0.36	0.00	0.35	0.00	0.35			
Sat Flow, veh/h	3442	3725	0	0	5588	1583	1774	0	3167			
Grp Volume(v), veh/h	380	886	0	0	1136	0	189	0	813			
Grp Sat Flow(s),veh/h/ln	1721	1863	0	0	1863	1583	1774	0	1583			
Q Serve(g_s), s	1.2	20.1	0.0	0.0	15.5	0.0	7.3	0.0	21.2			
Cycle Q Clear(g_c), s	1.2	20.1	0.0	0.0	15.5	0.0	7.3	0.0	21.2			
Prop In Lane	1.00		0.00	0.00		1.00	1.00		1.00			
Lane Grp Cap(c), veh/h	771	2016	0	0	2024	573	627	0	1120			
V/C Ratio(X)	0.49	0.44	0.00	0.00	0.56	0.00	0.30	0.00	0.73			
Avail Cap(c_a), veh/h	771	2016	0	0	2024	573	627	0	1120			
HCM Platoon Ratio	0.33	0.33	1.00	1.00	1.00	1.00	1.00	1.00	1.00			
Upstream Filter(I)	1.00	1.00	0.00	0.00	1.00	0.00	1.00	0.00	1.00			
Uniform Delay (d), s/veh	35.8	26.2	0.0	0.0	24.3	0.0	22.2	0.0	26.7			
Incr Delay (d2), s/veh	2.2	0.7	0.0	0.0	1.1	0.0	1.2	0.0	4.1			
Initial Q Delay(d3),s/veh	0.0	0.0	0.0	0.0	0.0	0.0	0.0	0.0	0.0			
%ile Back of Q (50%), veh/ln	4.9	10.3	0.0	0.0	7.3	0.0	3.4	0.0	8.9			
Lane Grp Delay (d), s/veh	38.0	26.9	0.0	0.0	25.4	0.0	23.4	0.0	30.8			
Lane Grp LOS	D	C			C		C		C			
Approach Vol, veh/h		1266			1136			1002				
Approach Delay, s/veh		30.2			25.4			29.4				
Approach LOS		C			C			C				

Timer												
Assigned Phs	5	2			6			8				
Phs Duration (G+Y+Rc), s	17.0	56.0			39.0			39.0				
Change Period (Y+Rc), s	4.6	4.6			4.6			5.4				
Max Green Setting (Gmax), s	12.4	51.4			34.4			33.6				
Max Q Clear Time (g_c+I1), s	3.2	22.1			17.5			23.2				
Green Ext Time (p_c), s	2.9	4.0			4.4			1.3				

Intersection Summary												
HCM 2010 Ctrl Delay			28.4									
HCM 2010 LOS			C									

Notes

User approved volume balancing among the lanes for turning movement.

MOVEMENT SUMMARY

Site: Butler/Herold Ranch 2020 Project - Copy

Butler Avenue/Herold Ranch Road
Roundabout

Movement Performance - Vehicles

Mov ID	Turn	Demand Flow veh/h	HV %	Deg. Satn v/c	Average Delay sec	Level of Service	95% Back of Queue Vehicles veh	95% Back of Queue Distance ft	Prop. Queued	Effective Stop Rate per veh	Average Speed mph
South: Herold Ranch Road											
3L	L	321	2.0	0.231	13.6	LOS B	1.2	31.7	0.65	0.89	26.2
8T	T	5	2.0	0.229	6.8	LOS A	1.2	31.7	0.65	0.66	27.9
8R	R	200	2.0	0.228	7.0	LOS A	1.3	33.0	0.64	0.66	28.6
Approach		526	2.0	0.231	11.0	LOS B	1.3	33.0	0.65	0.80	27.1
East: Butler Avenue											
1L	L	200	2.0	0.491	12.4	LOS B	3.7	93.0	0.60	0.86	27.2
6T	T	716	2.0	0.491	5.6	LOS A	3.7	93.0	0.60	0.56	29.0
6R	R	5	2.0	0.478	7.0	LOS A	3.7	93.0	0.60	0.66	29.1
Approach		921	2.0	0.491	7.1	LOS B	3.7	93.0	0.60	0.62	28.6
North: Site Access											
7L	L	5	2.0	0.035	13.4	LOS B	0.2	4.2	0.66	0.90	21.5
4T	T	5	2.0	0.035	6.4	LOS A	0.2	4.2	0.66	0.68	22.7
4R	R	5	2.0	0.035	7.5	LOS A	0.2	4.2	0.66	0.72	22.5
Approach		16	2.0	0.035	9.1	LOS B	0.2	4.2	0.66	0.77	22.2
West: Butler Avenue											
5L	L	5	2.0	0.405	11.5	LOS B	3.1	80.0	0.46	0.86	27.9
2T	T	995	2.0	0.408	4.6	LOS A	3.2	81.8	0.46	0.45	29.8
2R	R	358	2.0	0.286	5.4	LOS A	2.0	51.0	0.40	0.51	29.5
Approach		1358	2.0	0.408	4.8	LOS B	3.2	81.8	0.44	0.47	29.7
All Vehicles		2821	2.0	0.491	6.8	LOS A	3.7	93.0	0.53	0.58	28.7

Level of Service (Aver. Int. Delay): LOS A. Based on average delay for all vehicle movements. LOS Method: Delay (HCM).
Level of Service (Worst Movement): LOS B. LOS Method for individual vehicle movements: Delay (HCM).
Approach LOS values are based on the worst delay for any vehicle movement.
Roundabout LOS Method: Same as Signalised Intersections.
Roundabout Capacity Model: SIDRA Standard.

Copyright © 2000-2010 Akcelik & Associates Pty Ltd
www.sidrasolutions.com

Movement	EBL	EBT	EBR	WBL	WBT	WBR	NBL	NBT	NBR	SBL	SBT	SBR
Lane Configurations												
Volume (veh/h)	615	435	5	5	230	85	5	5	5	160	5	565
Number	5	2	12	1	6	16	3	8	18	7	4	14
Initial Q (Qb), veh	0	0	0	0	0	0	0	0	0	0	0	0
Ped-Bike Adj(A_pbT)	1.00		1.00	1.00		1.00	1.00		1.00	1.00		1.00
Parking Bus Adj	1.00	1.00	1.00	1.00	1.00	1.00	1.00	1.00	1.00	1.00	1.00	1.00
Adj Sat Flow veh/h/ln	186.3	186.3	190.0	186.3	186.3	186.3	190.0	186.3	190.0	190.0	186.3	186.3
Lanes	1	1	0	1	1	1	0	1	0	0	1	1
Cap, veh/h	725	930	10	273	354	301	75	73	45	304	8	995
Arrive On Green	0.32	0.51	0.51	0.01	0.19	0.19	0.31	0.31	0.31	0.31	0.31	0.31
Sat Flow, veh/h	1774	1840	19	1774	1863	1583	53	238	145	710	25	1583
Grp Volume(v), veh/h	668	0	478	5	250	92	15	0	0	179	0	614
Grp Sat Flow(s),veh/h/ln	1774	0	1859	1774	1863	1583	436	0	0	734	0	1583
Q Serve(g_s), s	22.2	0.0	14.1	0.2	10.3	4.1	0.2	0.0	0.0	0.0	0.0	19.3
Cycle Q Clear(g_c), s	22.2	0.0	14.1	0.2	10.3	4.1	22.2	0.0	0.0	22.0	0.0	19.3
Prop In Lane	1.00		0.01	1.00		1.00	0.33		0.33	0.97		1.00
Lane Grp Cap(c), veh/h	725	0	940	273	354	301	192	0	0	312	0	995
V/C Ratio(X)	0.92	0.00	0.51	0.02	0.71	0.31	0.08	0.00	0.00	0.57	0.00	0.62
Avail Cap(c_a), veh/h	1061	0	1396	369	560	476	240	0	0	366	0	1057
HCM Platoon Ratio	1.00	1.00	1.00	1.00	1.00	1.00	1.00	1.00	1.00	1.00	1.00	1.00
Upstream Filter(I)	1.00	0.00	1.00	1.00	1.00	1.00	1.00	0.00	0.00	1.00	0.00	1.00
Uniform Delay (d), s/veh	20.8	0.0	13.5	26.6	31.1	28.6	21.9	0.0	0.0	27.3	0.0	9.3
Incr Delay (d2), s/veh	9.5	0.0	0.3	0.0	1.9	0.4	0.1	0.0	0.0	0.6	0.0	0.7
Initial Q Delay(d3),s/veh	0.0	0.0	0.0	0.0	0.0	0.0	0.0	0.0	0.0	0.0	0.0	0.0
%ile Back of Q (50%), veh/ln	15.5	0.0	6.1	0.1	5.0	1.6	0.2	0.0	0.0	3.3	0.0	6.6
Lane Grp Delay (d), s/veh	30.3	0.0	13.8	26.6	33.1	29.0	22.0	0.0	0.0	27.9	0.0	9.9
Lane Grp LOS	C		B	C	C	C	C			C		A
Approach Vol, veh/h		1146			347			15			793	
Approach Delay, s/veh		23.4			31.9			22.0			14.0	
Approach LOS		C			C			C			B	

Timer												
Assigned Phs	5	2		1	6			8			4	
Phs Duration (G+Y+Rc), s	30.5	46.8		4.5	20.9			30.8			30.8	
Change Period (Y+Rc), s	4.0	5.3		4.0	5.3			5.6			5.6	
Max Green Setting (Gmax), s	42.0	61.7		5.0	24.7			28.4			28.4	
Max Q Clear Time (g_c+I1), s	24.2	16.1		2.2	12.3			24.2			24.0	
Green Ext Time (p_c), s	2.3	4.4		0.0	3.3			1.0			1.0	

Intersection Summary	
HCM 2010 Ctrl Delay	21.5
HCM 2010 LOS	C

Notes

Intersection	
Intersection Delay, s/veh	26.8

Movement	EBL	EBT	EBR	WBL	WBT	WBR	NBL	NBT	NBR	SBL	SBT	SBR
Vol, veh/h	185	0	5	5	0	240	5	160	5	240	210	165
Conflicting Peds, #/hr	0	0	0	0	0	0	0	0	0	0	0	0
Sign Control	Stop	Stop	Stop	Stop	Stop	Stop	Free	Free	Free	Free	Free	Free
RT Channelized	-	-	None	-	-	None	-	-	None	-	-	None
Storage Length	0	-	-	0	-	-	100	-	-	200	-	0
Veh in Median Storage, #	-	0	-	-	0	-	-	0	-	-	0	-
Grade, %	-	0	-	-	0	-	-	0	-	-	0	-
Peak Hour Factor	92	92	92	92	92	92	92	92	92	92	92	92
Heavy Vehicles, %	2	2	2	2	2	2	2	2	2	2	2	2
Mvmt Flow	201	0	5	5	0	261	5	174	5	261	228	179

Major/Minor	Minor2			Minor1			Major1			Major2		
Conflicting Flow All	1068	940	228	941	938	177	228	0	0	179	0	0
Stage 1	750	750	-	188	188	-	-	-	-	-	-	-
Stage 2	318	190	-	753	750	-	-	-	-	-	-	-
Follow-up Headway	3.518	4.018	3.318	3.518	4.018	3.318	2.218	-	-	2.218	-	-
Pot Capacity-1 Maneuver	# 199	264	811	243	264	866	1340	-	-	1397	-	-
Stage 1	403	419	-	814	745	-	-	-	-	-	-	-
Stage 2	693	743	-	402	419	-	-	-	-	-	-	-
Time blocked-Platoon, %								-	-		-	-
Mov Capacity-1 Maneuver	# 119	214	811	206	214	866	1340	-	-	1397	-	-
Mov Capacity-2 Maneuver	# 119	214	-	206	214	-	-	-	-	-	-	-
Stage 1	401	341	-	811	742	-	-	-	-	-	-	-
Stage 2	482	740	-	325	341	-	-	-	-	-	-	-

Approach	EB	WB	NB	SB
HCM Control Delay, s	146.9	11.3	0.2	3.2
HCM LOS	F	B		

Minor Lane / Major Mvmt	NBL	NBT	NBR	EBLn1	EBLn2	WBLn1	WBLn2	SBL	SBT	SBR
Capacity (veh/h)	1340	-	-	119	127	206	847	1397	-	-
HCM Lane V/C Ratio	0.004	-	-	1.127	0.571	0.018	0.31	0.187	-	-
HCM Control Delay (s)	7.698	-	-	190.8	65.6	22.8	11.1	8.168	-	-
HCM Lane LOS	A			F	F	C	B	A		
HCM 95th %tile Q(veh)	0.012	-	-	8.094	2.82	0.054	1.325	0.686	-	-

Notes

~ : Volume Exceeds Capacity; $: Delay Exceeds 300 Seconds; Error : Computation Not Defined

Intersection	
Intersection Delay, s/veh	1.2

Movement	EBL	EBT	EBR	WBL	WBT	WBR	NBL	NBT	NBR	SBL	SBT	SBR
Vol, veh/h	30	0	0	0	0	5	0	135	0	10	140	60
Conflicting Peds, #/hr	0	0	0	0	0	0	0	0	0	0	0	0
Sign Control	Stop	Stop	Stop	Stop	Stop	Stop	Free	Free	Free	Free	Free	Free
RT Channelized	-	-	None	-	-	None	-	-	None	-	-	None
Storage Length	200	-	-	-	-	-	200	-	-	200	-	-
Veh in Median Storage, #	-	0	-	-	0	-	-	0	-	-	0	-
Grade, %	-	0	-	-	0	-	-	0	-	-	0	-
Peak Hour Factor	92	92	92	92	92	92	92	92	92	92	92	92
Heavy Vehicles, %	2	2	2	2	2	2	2	2	2	2	2	2
Mvmt Flow	33	0	0	0	0	5	0	147	0	11	152	65

Major/Minor	Minor2			Minor1			Major1			Major2		
Conflicting Flow All	356	354	185	354	386	147	217	0	0	147	0	0
Stage 1	207	207	-	147	147	-	-	-	-	-	-	-
Stage 2	149	147	-	207	239	-	-	-	-	-	-	-
Follow-up Headway	3.518	4.018	3.318	3.518	4.018	3.318	2.218	-	-	2.218	-	-
Pot Capacity-1 Maneuver	599	571	857	601	548	900	1353	-	-	1435	-	-
Stage 1	795	731	-	856	775	-	-	-	-	-	-	-
Stage 2	854	775	-	795	708	-	-	-	-	-	-	-
Time blocked-Platoon, %								-	-		-	-
Mov Capacity-1 Maneuver	592	567	857	597	544	900	1353	-	-	1435	-	-
Mov Capacity-2 Maneuver	592	567	-	597	544	-	-	-	-	-	-	-
Stage 1	795	725	-	856	775	-	-	-	-	-	-	-
Stage 2	849	775	-	789	703	-	-	-	-	-	-	-

Approach	EB	WB	NB	SB
HCM Control Delay, s	11.3	9	0	0.4
HCM LOS	B	A		

Minor Lane / Major Mvmt	NBL	NBT	NBR	EBLn1	EBLn2	WBLn1	SBL	SBT	SBR
Capacity (veh/h)	1353	-	-	592	592	900	1435	-	-
HCM Lane V/C Ratio	-	-	-	0.037	0.018	0.006	0.008	-	-
HCM Control Delay (s)	0	-	-	11.3	11.2	9	7.528	-	-
HCM Lane LOS	A			B	B	A	A		
HCM 95th %tile Q(veh)	0	-	-	0.114	0.056	0.018	0.023	-	-

Notes

~ : Volume Exceeds Capacity; $: Delay Exceeds 300 Seconds; Error : Computation Not Defined

Movement	EBL	EBT	EBR	WBL	WBT	WBR	NBL	NBT	NBR	SBL	SBT	SBR
Lane Configurations												
Volume (veh/h)	15	5	10	25	5	105	15	865	25	170	845	25
Number	7	4	14	3	8	18	5	2	12	1	6	16
Initial Q (Qb), veh	0	0	0	0	0	0	0	0	0	0	0	0
Ped-Bike Adj(A_pbT)	1.00		1.00	1.00		1.00	1.00		1.00	1.00		1.00
Parking Bus Adj	1.00	1.00	1.00	1.00	1.00	1.00	1.00	1.00	1.00	1.00	1.00	1.00
Adj Sat Flow veh/h/ln	190.0	186.3	190.0	186.3	186.3	190.0	186.3	186.3	190.0	186.3	186.3	186.3
Lanes	0	1	0	1	1	0	1	1	0	1	1	1
Cap, veh/h	97	36	45	158	9	212	410	1191	34	401	1474	1253
Arrive On Green	0.14	0.14	0.14	0.14	0.14	0.14	0.66	0.66	0.66	0.10	0.79	0.79
Sat Flow, veh/h	360	256	323	1392	67	1526	591	1802	52	1774	1863	1583
Grp Volume(v), veh/h	32	0	0	27	0	119	16	0	967	185	918	27
Grp Sat Flow(s),veh/h/ln	939	0	0	1392	0	1593	591	0	1854	1774	1863	1583
Q Serve(g_s), s	0.1	0.0	0.0	2.1	0.0	8.0	1.3	0.0	42.5	3.0	23.3	0.4
Cycle Q Clear(g_c), s	8.1	0.0	0.0	10.2	0.0	8.0	9.6	0.0	42.5	3.0	23.3	0.4
Prop In Lane	0.50		0.34	1.00		0.96	1.00		0.03	1.00		1.00
Lane Grp Cap(c), veh/h	178	0	0	158	0	222	410	0	1225	401	1474	1253
V/C Ratio(X)	0.18	0.00	0.00	0.17	0.00	0.54	0.04	0.00	0.79	0.46	0.62	0.02
Avail Cap(c_a), veh/h	178	0	0	158	0	222	410	0	1225	401	1474	1253
HCM Platoon Ratio	1.00	1.00	1.00	1.00	1.00	1.00	1.00	1.00	1.00	1.00	1.00	1.00
Upstream Filter(I)	1.00	0.00	0.00	1.00	0.00	1.00	1.00	0.00	1.00	1.00	1.00	1.00
Uniform Delay (d), s/veh	43.6	0.0	0.0	50.9	0.0	46.1	10.0	0.0	13.8	16.0	4.9	2.5
Incr Delay (d2), s/veh	2.2	0.0	0.0	2.3	0.0	9.0	0.2	0.0	5.2	3.8	2.0	0.0
Initial Q Delay(d3),s/veh	0.0	0.0	0.0	0.0	0.0	0.0	0.0	0.0	0.0	0.0	0.0	0.0
%ile Back of Q (50%), veh/ln	0.9	0.0	0.0	0.9	0.0	3.8	0.2	0.0	19.5	3.2	9.2	0.1
Lane Grp Delay (d), s/veh	45.8	0.0	0.0	53.2	0.0	55.1	10.2	0.0	19.0	19.7	6.9	2.6
Lane Grp LOS	D			D		E	B		B	B	A	A
Approach Vol, veh/h		32			146			983			1130	
Approach Delay, s/veh		45.8			54.7			18.9			8.9	
Approach LOS		D			D			B			A	

Timer					
Assigned Phs		4		8		2		1	6	
Phs Duration (G+Y+Rc), s		20.0		20.0		80.0		15.0	95.0	
Change Period (Y+Rc), s		4.0		4.0		4.0		4.0	4.0	
Max Green Setting (Gmax), s		16.0		16.0		76.0		11.0	91.0	
Max Q Clear Time (g_c+I1), s		10.1		12.2		44.5		5.0	25.3	
Green Ext Time (p_c), s		0.4		0.3		20.1		0.2	29.6	

Intersection Summary	
HCM 2010 Ctrl Delay	16.6
HCM 2010 LOS	B

Notes

Movement	SEL	SET	NWT	NWR	SWL	SWR
Lane Configurations						
Volume (veh/h)	430	815	985	160	100	260
Number	1	6	2	12	3	18
Initial Q (Qb), veh	0	0	0	0	0	0
Ped-Bike Adj(A_pbT)	1.00			1.00	1.00	1.00
Parking Bus Adj	1.00	1.00	1.00	1.00	1.00	1.00
Adj Sat Flow veh/h/ln	186.3	186.3	186.3	190.0	186.3	186.3
Lanes	1	1	2	0	1	1
Cap, veh/h	671	1458	1388	225	262	234
Arrive On Green	0.30	0.78	0.44	0.44	0.15	0.15
Sat Flow, veh/h	1774	1863	3129	507	1774	1583
Grp Volume(v), veh/h	467	886	637	608	109	283
Grp Sat Flow(s),veh/h/ln	1774	1863	1863	1773	1774	1583
Q Serve(g_s), s	17.1	22.7	33.2	33.4	6.4	17.0
Cycle Q Clear(g_c), s	17.1	22.7	33.2	33.4	6.4	17.0
Prop In Lane	1.00			0.29	1.00	1.00
Lane Grp Cap(c), veh/h	671	1458	826	786	262	234
V/C Ratio(X)	0.70	0.61	0.77	0.77	0.42	1.21
Avail Cap(c_a), veh/h	671	1458	826	786	262	234
HCM Platoon Ratio	1.00	1.00	1.00	1.00	1.00	1.00
Upstream Filter(I)	1.00	1.00	1.00	1.00	1.00	1.00
Uniform Delay (d), s/veh	22.6	5.2	27.1	27.1	44.5	49.0
Incr Delay (d2), s/veh	5.9	1.9	6.9	7.3	4.8	127.0
Initial Q Delay(d3),s/veh	0.0	0.0	0.0	0.0	0.0	0.0
%ile Back of Q (50%), veh/ln	7.1	9.1	16.8	16.1	3.3	15.2
Lane Grp Delay (d), s/veh	28.5	7.1	33.9	34.4	49.3	176.0
Lane Grp LOS	C	A	C	C	D	F
Approach Vol, veh/h		1353	1245		392	
Approach Delay, s/veh		14.5	34.2		140.8	
Approach LOS		B	C		F	

Timer			
Assigned Phs	1	6	2
Phs Duration (G+Y+Rc), s	39.0	94.0	55.0
Change Period (Y+Rc), s	4.0	4.0	4.0
Max Green Setting (Gmax), s	35.0	90.0	51.0
Max Q Clear Time (g_c+I1), s	19.1	24.7	35.4
Green Ext Time (p_c), s	1.4	30.8	12.2

Intersection Summary	
HCM 2010 Ctrl Delay	39.2
HCM 2010 LOS	D

Notes

APPENDIX E 2025 BACKGROUND LEVEL OF SERVICE WORKSHEETS

Movement	SEL	SET	SER	NWL	NWT	NWR	NEL	NET	NER	SWL	SWT	SWR
Lane Configurations												
Volume (veh/h)	375	770	285	250	890	200	275	755	260	260	670	250
Number	7	4	14	3	8	18	5	2	12	1	6	16
Initial Q (Qb), veh	0	0	0	0	0	0	0	0	0	0	0	0
Ped-Bike Adj(A_pbT)	1.00		1.00	1.00		1.00	1.00		1.00	1.00		1.00
Parking Bus Adj	1.00	1.00	1.00	1.00	1.00	1.00	1.00	1.00	1.00	1.00	1.00	1.00
Adj Sat Flow veh/h/ln	186.3	186.3	186.3	186.3	186.3	186.3	186.3	186.3	186.3	186.3	186.3	186.3
Lanes	2	2	1	2	2	1	2	2	1	2	2	1
Cap, veh/h	467	1203	511	338	1062	452	367	1008	428	351	990	421
Arrive On Green	0.14	0.32	0.32	0.10	0.29	0.29	0.11	0.27	0.27	0.10	0.27	0.27
Sat Flow, veh/h	3442	3725	1583	3442	3725	1583	3442	3725	1583	3442	3725	1583
Grp Volume(v), veh/h	408	837	310	272	967	217	299	821	283	283	728	272
Grp Sat Flow(s),veh/h/ln	1721	1863	1583	1721	1863	1583	1721	1863	1583	1721	1863	1583
Q Serve(g_s), s	12.3	20.7	17.4	8.2	26.4	12.0	9.0	21.8	16.8	8.5	18.8	16.1
Cycle Q Clear(g_c), s	12.3	20.7	17.4	8.2	26.4	12.0	9.0	21.8	16.8	8.5	18.8	16.1
Prop In Lane	1.00		1.00	1.00		1.00	1.00		1.00	1.00		1.00
Lane Grp Cap(c), veh/h	467	1203	511	338	1062	452	367	1008	428	351	990	421
V/C Ratio(X)	0.87	0.70	0.61	0.81	0.91	0.48	0.81	0.81	0.66	0.81	0.74	0.65
Avail Cap(c_a), veh/h	489	1203	511	522	1168	497	717	1063	452	652	992	422
HCM Platoon Ratio	1.00	1.00	1.00	1.00	1.00	1.00	1.00	1.00	1.00	1.00	1.00	1.00
Upstream Filter(I)	1.00	1.00	1.00	1.00	1.00	1.00	1.00	1.00	1.00	1.00	1.00	1.00
Uniform Delay (d), s/veh	44.7	31.2	30.1	46.6	36.4	31.2	46.1	36.0	34.2	46.4	35.4	34.3
Incr Delay (d2), s/veh	14.7	1.5	1.5	2.6	9.5	0.3	1.7	4.6	3.0	1.7	2.7	3.1
Initial Q Delay(d3),s/veh	0.0	0.0	0.0	0.0	0.0	0.0	0.0	0.0	0.0	0.0	0.0	0.0
%ile Back of Q (50%), veh/ln	6.4	9.9	7.1	3.7	13.9	4.8	4.1	10.8	7.0	3.8	9.3	6.7
Lane Grp Delay (d), s/veh	59.4	32.7	31.6	49.2	45.9	31.5	47.8	40.6	37.2	48.1	38.1	37.5
Lane Grp LOS	E	C	C	D	D	C	D	D	D	D	D	D
Approach Vol, veh/h		1555			1456			1403			1283	
Approach Delay, s/veh		39.5			44.4			41.4			40.2	
Approach LOS		D			D			D			D	

Timer												
Assigned Phs	7	4		3	8		5	2		1	6	
Phs Duration (G+Y+Rc), s	19.3	40.0		15.4	36.0		16.3	34.5		15.8	33.9	
Change Period (Y+Rc), s	5.0	5.9		5.0	5.9		5.0	5.9		5.0	5.9	
Max Green Setting (Gmax), s	15.0	32.1		16.0	33.1		22.0	30.1		20.0	28.1	
Max Q Clear Time (g_c+I1), s	14.3	22.7		10.2	28.4		11.0	23.8		10.5	20.8	
Green Ext Time (p_c), s	0.1	5.5		0.2	1.7		0.3	4.8		0.3	5.4	

Intersection Summary	
HCM 2010 Ctrl Delay	41.4
HCM 2010 LOS	D

Notes

Movement	SEL	SET	SER	NWL	NWT	NWR	NEL	NET	NER	SWL	SWT	SWR
Lane Configurations												
Volume (veh/h)	70	1010	455	130	890	105	515	195	170	200	175	105
Number	7	4	14	3	8	18	5	2	12	1	6	16
Initial Q (Qb), veh	0	0	0	0	0	0	0	0	0	0	0	0
Ped-Bike Adj(A_pbT)	1.00		1.00	1.00		1.00	1.00		1.00	1.00		1.00
Parking Bus Adj	1.00	1.00	1.00	1.00	1.00	1.00	1.00	1.00	1.00	1.00	1.00	1.00
Adj Sat Flow veh/h/ln	186.3	186.3	186.3	186.3	186.3	190.0	186.3	186.3	186.3	186.3	186.3	186.3
Lanes	1	2	1	1	2	0	2	1	1	1	1	1
Cap, veh/h	226	1210	774	234	1110	131	566	388	330	422	312	265
Arrive On Green	0.05	0.32	0.32	0.07	0.34	0.34	0.16	0.21	0.21	0.12	0.17	0.17
Sat Flow, veh/h	1774	3725	1583	1774	3272	386	3442	1863	1583	1774	1863	1583
Grp Volume(v), veh/h	76	1098	495	141	550	531	560	212	185	217	190	114
Grp Sat Flow(s),veh/h/ln	1774	1863	1583	1774	1863	1795	1721	1863	1583	1774	1863	1583
Q Serve(g_s), s	2.0	20.6	17.0	3.7	20.2	20.2	11.9	7.4	7.6	7.2	6.9	4.7
Cycle Q Clear(g_c), s	2.0	20.6	17.0	3.7	20.2	20.2	11.9	7.4	7.6	7.2	6.9	4.7
Prop In Lane	1.00		1.00	1.00		0.21	1.00		1.00	1.00		1.00
Lane Grp Cap(c), veh/h	226	1210	774	234	632	609	566	388	330	422	312	265
V/C Ratio(X)	0.34	0.91	0.64	0.60	0.87	0.87	0.99	0.55	0.56	0.51	0.61	0.43
Avail Cap(c_a), veh/h	252	1235	785	234	632	609	566	809	687	422	732	622
HCM Platoon Ratio	1.00	1.00	1.00	1.00	1.00	1.00	1.00	1.00	1.00	1.00	1.00	1.00
Upstream Filter(I)	1.00	1.00	1.00	1.00	1.00	1.00	1.00	1.00	1.00	1.00	1.00	1.00
Uniform Delay (d), s/veh	17.7	23.6	13.9	18.0	22.6	22.6	30.5	25.8	25.9	21.1	28.2	27.3
Incr Delay (d2), s/veh	0.9	9.8	1.7	4.3	12.6	13.0	35.2	1.2	1.5	1.1	1.9	1.1
Initial Q Delay(d3),s/veh	0.0	0.0	0.0	0.0	0.0	0.0	0.0	0.0	0.0	0.0	0.0	0.0
%ile Back of Q (50%), veh/ln	0.9	10.8	6.3	2.8	11.2	10.9	7.8	3.5	3.1	3.2	3.3	1.9
Lane Grp Delay (d), s/veh	18.6	33.4	15.6	22.3	35.2	35.6	65.7	27.0	27.4	22.2	30.1	28.4
Lane Grp LOS	B	C	B	C	D	D	E	C	C	C	C	C
Approach Vol, veh/h		1669			1222			957			521	
Approach Delay, s/veh		27.4			33.9			49.7			26.4	
Approach LOS		C			C			D			C	

Timer												
Assigned Phs	7	4		3	8		5	2		1	6	
Phs Duration (G+Y+Rc), s	7.9	29.5		9.0	30.6		16.0	21.5		13.0	18.5	
Change Period (Y+Rc), s	4.0	5.8		4.0	5.8		4.0	6.3		4.0	6.3	
Max Green Setting (Gmax), s	5.0	24.2		5.0	24.2		12.0	31.7		9.0	28.7	
Max Q Clear Time (g_c+I1), s	4.0	22.6		5.7	22.2		13.9	9.6		9.2	8.9	
Green Ext Time (p_c), s	0.0	1.1		0.0	1.8		0.0	3.4		0.0	3.3	

Intersection Summary	
HCM 2010 Ctrl Delay	34.0
HCM 2010 LOS	C

Notes

Movement	EBL	EBT	EBR	WBL	WBT	WBR	NBL	NBT	NBR	SBL	SBT	SBR
Lane Configurations												
Volume (veh/h)	10	1070	540	255	860	5	345	15	255	15	10	5
Number	5	2	12	1	6	16	3	8	18	7	4	14
Initial Q (Qb), veh	0	0	0	0	0	0	0	0	0	0	0	0
Ped-Bike Adj(A_pbT)	1.00		1.00	1.00		1.00	1.00		1.00	1.00		1.00
Parking Bus Adj	1.00	1.00	1.00	1.00	1.00	1.00	1.00	1.00	1.00	1.00	1.00	1.00
Adj Sat Flow veh/h/ln	186.3	186.3	186.3	186.3	186.3	186.3	186.3	186.3	186.3	186.3	186.3	186.3
Lanes	1	2	1	1	2	1	2	1	1	1	1	1
Cap, veh/h	365	1689	718	309	2281	969	447	307	261	166	104	89
Arrive On Green	0.02	0.45	0.45	0.17	0.61	0.61	0.13	0.16	0.16	0.02	0.06	0.06
Sat Flow, veh/h	1774	3725	1583	1774	3725	1583	3442	1863	1583	1774	1863	1583
Grp Volume(v), veh/h	11	1163	587	277	935	5	375	16	277	16	11	5
Grp Sat Flow(s),veh/h/ln	1774	1863	1583	1774	1863	1583	1721	1863	1583	1774	1863	1583
Q Serve(g_s), s	0.4	26.2	34.0	16.2	13.7	0.1	11.3	0.8	17.4	0.9	0.6	0.3
Cycle Q Clear(g_c), s	0.4	26.2	34.0	16.2	13.7	0.1	11.3	0.8	17.4	0.9	0.6	0.3
Prop In Lane	1.00		1.00	1.00		1.00	1.00		1.00	1.00		1.00
Lane Grp Cap(c), veh/h	365	1689	718	309	2281	969	447	307	261	166	104	89
V/C Ratio(X)	0.03	0.69	0.82	0.90	0.41	0.01	0.84	0.05	1.06	0.10	0.11	0.06
Avail Cap(c_a), veh/h	455	1758	747	453	2463	1047	586	307	261	229	104	89
HCM Platoon Ratio	1.00	1.00	1.00	1.00	1.00	1.00	1.00	1.00	1.00	1.00	1.00	1.00
Upstream Filter(I)	1.00	1.00	1.00	1.00	1.00	1.00	1.00	1.00	1.00	1.00	1.00	1.00
Uniform Delay (d), s/veh	15.0	23.0	25.1	42.7	10.6	8.0	44.9	37.2	44.2	45.4	47.4	47.3
Incr Delay (d2), s/veh	0.0	1.1	6.9	11.4	0.1	0.0	7.5	0.1	73.4	0.1	0.2	0.1
Initial Q Delay(d3),s/veh	0.0	0.0	0.0	0.0	0.0	0.0	0.0	0.0	0.0	0.0	0.0	0.0
%ile Back of Q (50%), veh/ln	0.1	12.2	14.4	8.3	6.0	0.0	5.5	0.4	12.4	0.4	0.3	0.1
Lane Grp Delay (d), s/veh	15.0	24.1	32.0	54.1	10.7	8.0	52.4	37.3	117.6	45.5	47.6	47.4
Lane Grp LOS	B	C	C	D	B	A	D	D	F	D	D	D
Approach Vol, veh/h		1761			1217			668			32	
Approach Delay, s/veh		26.6			20.6			79.1			46.5	
Approach LOS		C			C			E			D	

Timer												
Assigned Phs	5	2		1	6		3	8		7	4	
Phs Duration (G+Y+Rc), s	5.7	54.1		22.4	70.8		17.7	23.0		6.2	11.5	
Change Period (Y+Rc), s	4.0	6.1		4.0	6.1		4.0	5.6		4.0	5.6	
Max Green Setting (Gmax), s	7.0	49.9		27.0	69.9		18.0	17.4		6.0	5.4	
Max Q Clear Time (g_c+I1), s	2.4	36.0		18.2	15.7		13.3	19.4		2.9	2.6	
Green Ext Time (p_c), s	0.0	11.9		0.3	34.0		0.5	0.0		0.0	0.2	

Intersection Summary	
HCM 2010 Ctrl Delay	34.3
HCM 2010 LOS	C

Notes

Movement	EBL	EBT	EBR	WBL	WBT	WBR	NBL	NBT	NBR	SBL	SBT	SBR
Lane Configurations												
Volume (veh/h)	5	1345	120	65	1000	5	145	5	125	5	0	5
Number	5	2	12	1	6	16	3	8	18	7	4	14
Initial Q (Qb), veh	0	0	0	0	0	0	0	0	0	0	0	0
Ped-Bike Adj(A_pbT)	1.00		1.00	1.00		1.00	1.00		1.00	1.00		1.00
Parking Bus Adj	1.00	1.00	1.00	1.00	1.00	1.00	1.00	1.00	1.00	1.00	1.00	1.00
Adj Sat Flow veh/h/ln	186.3	186.3	190.0	186.3	186.3	190.0	186.3	186.3	190.0	190.0	186.3	190.0
Lanes	1	2	0	1	2	0	1	1	0	0	1	0
Cap, veh/h	14	2094	185	302	2492	11	207	7	179	98	0	98
Arrive On Green	0.01	0.62	0.62	0.06	0.67	0.67	0.12	0.12	0.12	0.12	0.00	0.12
Sat Flow, veh/h	1774	3375	298	1774	3705	17	1774	56	1535	837	0	837
Grp Volume(v), veh/h	5	803	789	71	546	546	158	0	141	10	0	0
Grp Sat Flow(s),veh/h/ln	1774	1863	1810	1774	1863	1860	1774	0	1592	1673	0	0
Q Serve(g_s), s	0.2	22.7	23.1	0.8	10.7	10.7	6.8	0.0	6.8	0.4	0.0	0.0
Cycle Q Clear(g_c), s	0.2	22.7	23.1	0.8	10.7	10.7	6.8	0.0	6.8	0.4	0.0	0.0
Prop In Lane	1.00		0.16	1.00		0.01	1.00		0.96	0.50		0.50
Lane Grp Cap(c), veh/h	14	1156	1123	302	1253	1251	207	0	186	195	0	0
V/C Ratio(X)	0.36	0.69	0.70	0.23	0.44	0.44	0.76	0.00	0.76	0.05	0.00	0.00
Avail Cap(c_a), veh/h	135	1299	1263	331	1299	1297	315	0	283	195	0	0
HCM Platoon Ratio	1.00	1.00	1.00	1.00	1.00	1.00	1.00	1.00	1.00	1.00	1.00	1.00
Upstream Filter(I)	1.00	1.00	1.00	1.00	1.00	1.00	1.00	0.00	1.00	1.00	0.00	0.00
Uniform Delay (d), s/veh	38.9	10.0	10.1	9.4	6.0	6.0	33.8	0.0	33.8	31.0	0.0	0.0
Incr Delay (d2), s/veh	14.7	1.4	1.5	0.4	0.2	0.2	2.3	0.0	2.4	0.1	0.0	0.0
Initial Q Delay(d3),s/veh	0.0	0.0	0.0	0.0	0.0	0.0	0.0	0.0	0.0	0.0	0.0	0.0
%ile Back of Q (50%), veh/ln	0.2	9.4	9.2	0.6	4.0	4.0	3.2	0.0	2.8	0.2	0.0	0.0
Lane Grp Delay (d), s/veh	53.6	11.4	11.6	9.8	6.2	6.2	36.1	0.0	36.2	31.1	0.0	0.0
Lane Grp LOS	D	B	B	A	A	A	D		D	C		
Approach Vol, veh/h		1597			1163			299			10	
Approach Delay, s/veh		11.6			6.4			36.1			31.1	
Approach LOS		B			A			D			C	

Timer												
Assigned Phs	5	2		1	6			8			4	
Phs Duration (G+Y+Rc), s	4.6	54.9		8.7	59.0			15.2			15.2	
Change Period (Y+Rc), s	4.0	6.0		4.0	6.0			6.0			6.0	
Max Green Setting (Gmax), s	6.0	55.0		6.0	55.0			14.0			8.0	
Max Q Clear Time (g_c+I1), s	2.2	25.1		2.8	12.7			8.8			2.4	
Green Ext Time (p_c), s	0.0	23.8		0.0	31.1			0.4			0.4	

Intersection Summary												
HCM 2010 Ctrl Delay			12.1									
HCM 2010 LOS			B									

Notes

Movement	EBL	EBT	EBR	WBL	WBT	WBR	NEL	NET	NER	SWL	SWT	SWR
Lane Configurations												
Volume (veh/h)	95	450	225	425	265	60	270	515	645	125	360	5
Number	5	2	12	1	6	16	3	8	18	7	4	14
Initial Q (Qb), veh	0	0	0	0	0	0	0	0	0	0	0	0
Ped-Bike Adj(A_pbT)	1.00		1.00	1.00		1.00	1.00		1.00	1.00		1.00
Parking Bus Adj	1.00	1.00	1.00	1.00	1.00	1.00	1.00	1.00	1.00	1.00	1.00	1.00
Adj Sat Flow veh/h/ln	186.3	186.3	186.3	186.3	186.3	190.0	186.3	186.3	186.3	186.3	186.3	190.0
Lanes	1	1	1	2	2	0	1	2	2	1	2	0
Cap, veh/h	133	585	497	536	1166	259	326	892	1252	164	544	7
Arrive On Green	0.07	0.31	0.31	0.16	0.39	0.39	0.18	0.24	0.24	0.09	0.15	0.15
Sat Flow, veh/h	1774	1863	1583	3442	2954	656	1774	3725	3167	1774	3670	47
Grp Volume(v), veh/h	103	489	245	462	180	173	293	560	701	136	198	198
Grp Sat Flow(s),veh/h/ln	1774	1863	1583	1721	1863	1747	1774	1863	1583	1774	1863	1854
Q Serve(g_s), s	6.8	29.1	15.0	15.6	7.7	7.9	19.2	16.0	20.5	9.0	12.1	12.1
Cycle Q Clear(g_c), s	6.8	29.1	15.0	15.6	7.7	7.9	19.2	16.0	20.5	9.0	12.1	12.1
Prop In Lane	1.00		1.00	1.00		0.38	1.00		1.00	1.00		0.03
Lane Grp Cap(c), veh/h	133	585	497	536	736	690	326	892	1252	164	276	275
V/C Ratio(X)	0.78	0.84	0.49	0.86	0.24	0.25	0.90	0.63	0.56	0.83	0.72	0.72
Avail Cap(c_a), veh/h	238	802	682	694	927	870	477	1004	1347	283	299	297
HCM Platoon Ratio	1.00	1.00	1.00	1.00	1.00	1.00	1.00	1.00	1.00	1.00	1.00	1.00
Upstream Filter(I)	1.00	1.00	1.00	1.00	1.00	1.00	1.00	1.00	1.00	1.00	1.00	1.00
Uniform Delay (d), s/veh	54.1	38.0	33.2	49.0	24.1	24.2	47.5	40.5	28.0	53.1	48.3	48.3
Incr Delay (d2), s/veh	9.3	5.7	0.8	8.7	0.2	0.2	14.7	1.0	0.5	10.0	7.4	7.5
Initial Q Delay(d3),s/veh	0.0	0.0	0.0	0.0	0.0	0.0	0.0	0.0	0.0	0.0	0.0	0.0
%ile Back of Q (50%), veh/ln	3.5	14.6	6.1	7.6	3.7	3.5	10.2	7.8	8.2	4.6	6.4	6.4
Lane Grp Delay (d), s/veh	63.4	43.7	33.9	57.7	24.3	24.4	62.2	41.6	28.4	63.1	55.7	55.8
Lane Grp LOS	E	D	C	E	C	C	E	D	C	E	E	E
Approach Vol, veh/h		837			815			1554			532	
Approach Delay, s/veh		43.3			43.3			39.5			57.7	
Approach LOS		D			D			D			E	

Timer												
Assigned Phs	5	2		1	6		3	8		7	4	
Phs Duration (G+Y+Rc), s	12.9	45.1		22.6	54.7		25.9	36.4		15.0	25.6	
Change Period (Y+Rc), s	4.0	7.7		4.0	7.7		4.0	7.9		4.0	7.9	
Max Green Setting (Gmax), s	16.0	51.3		24.0	59.3		32.0	32.1		19.0	19.1	
Max Q Clear Time (g_c+I1), s	8.8	31.1		17.6	9.9		21.2	22.5		11.0	14.1	
Green Ext Time (p_c), s	0.1	6.3		1.0	7.5		0.7	6.0		0.2	3.6	

Intersection Summary	
HCM 2010 Ctrl Delay	43.8
HCM 2010 LOS	D

Notes

Movement	EBL	EBT	EBR	WBL	WBT	WBR	NBL	NBT	NBR	SBL	SBT	SBR
Lane Configurations												
Volume (veh/h)	0	1035	360	320	915	0	0	0	0	50	5	295
Number	5	2	12	1	6	16				7	4	14
Initial Q (Qb), veh	0	0	0	0	0	0				0	0	0
Ped-Bike Adj(A_pbT)	1.00		1.00	1.00		1.00				1.00		1.00
Parking Bus Adj	1.00	1.00	1.00	1.00	1.00	1.00				1.00	1.00	1.00
Adj Sat Flow veh/h/ln	0.0	186.3	186.3	186.3	186.3	0.0				186.3	186.3	186.3
Lanes	0	3	1	2	2	0				1	0	2
Cap, veh/h	0	2965	840	1015	2682	0				308	0	550
Arrive On Green	0.00	0.53	0.00	0.05	0.24	0.00				0.17	0.00	0.17
Sat Flow, veh/h	0	5588	1583	3442	3725	0				1774	0	3167
Grp Volume(v), veh/h	0	1125	0	348	995	0				38	0	342
Grp Sat Flow(s),veh/h/ln	0	1863	1583	1721	1863	0				1774	0	1583
Q Serve(g_s), s	0.0	11.2	0.0	0.0	21.2	0.0				1.7	0.0	9.5
Cycle Q Clear(g_c), s	0.0	11.2	0.0	0.0	21.2	0.0				1.7	0.0	9.5
Prop In Lane	0.00		1.00	1.00		0.00				1.00		1.00
Lane Grp Cap(c), veh/h	0	2965	840	1015	2682	0				308	0	550
V/C Ratio(X)	0.00	0.38	0.00	0.34	0.37	0.00				0.12	0.00	0.62
Avail Cap(c_a), veh/h	0	2965	840	1015	2682	0				308	0	550
HCM Platoon Ratio	1.00	1.00	1.00	0.33	0.33	1.00				1.00	1.00	1.00
Upstream Filter(I)	0.00	1.00	0.00	1.00	1.00	0.00				1.00	0.00	1.00
Uniform Delay (d), s/veh	0.0	13.1	0.0	19.2	18.2	0.0				33.1	0.0	36.4
Incr Delay (d2), s/veh	0.0	0.4	0.0	0.9	0.4	0.0				0.8	0.0	5.2
Initial Q Delay(d3),s/veh	0.0	0.0	0.0	0.0	0.0	0.0				0.0	0.0	0.0
%ile Back of Q (50%), veh/ln	0.0	5.0	0.0	3.5	10.9	0.0				0.8	0.0	4.2
Lane Grp Delay (d), s/veh	0.0	13.5	0.0	20.1	18.6	0.0				34.0	0.0	41.6
Lane Grp LOS		B		C	B					C		D
Approach Vol, veh/h		1125			1343						380	
Approach Delay, s/veh		13.5			19.0						40.8	
Approach LOS		B			B						D	

Timer			
Assigned Phs	2	1	6	4
Phs Duration (G+Y+Rc), s	55.0	18.0	73.0	22.0
Change Period (Y+Rc), s	4.6	4.6	4.6	5.5
Max Green Setting (Gmax), s	50.4	13.4	68.4	16.5
Max Q Clear Time (g_c+I1), s	13.2	2.0	23.2	11.5
Green Ext Time (p_c), s	5.0	3.6	4.7	0.3

Intersection Summary	
HCM 2010 Ctrl Delay	19.7
HCM 2010 LOS	B

Notes

User approved volume balancing among the lanes for turning movement.

Movement	EBL	EBT	EBR	WBL	WBT	WBR	NBL	NBT	NBR	SBL	SBT	SBR
Lane Configurations												
Volume (veh/h)	365	720	0	0	935	80	300	0	635	0	0	0
Number	5	2	12	1	6	16	3	8	18			
Initial Q (Qb), veh	0	0	0	0	0	0	0	0	0			
Ped-Bike Adj(A_pbT)	1.00		1.00	1.00		1.00	1.00		1.00			
Parking Bus Adj	1.00	1.00	1.00	1.00	1.00	1.00	1.00	1.00	1.00			
Adj Sat Flow veh/h/ln	186.3	186.3	0.0	0.0	186.3	186.3	186.3	186.3	186.3			
Lanes	2	2	0	0	3	1	1	0	2			
Cap, veh/h	796	1937	0	0	1847	523	665	0	1187			
Arrive On Green	0.05	0.17	0.00	0.00	0.33	0.33	0.37	0.00	0.37			
Sat Flow, veh/h	3442	3725	0	0	5588	1583	1774	0	3167			
Grp Volume(v), veh/h	397	783	0	0	1016	87	217	0	806			
Grp Sat Flow(s),veh/h/ln	1721	1863	0	0	1863	1583	1774	0	1583			
Q Serve(g_s), s	2.0	17.8	0.0	0.0	14.1	3.7	8.3	0.0	20.3			
Cycle Q Clear(g_c), s	2.0	17.8	0.0	0.0	14.1	3.7	8.3	0.0	20.3			
Prop In Lane	1.00		0.00	0.00		1.00	1.00		1.00			
Lane Grp Cap(c), veh/h	796	1937	0	0	1847	523	665	0	1187			
V/C Ratio(X)	0.50	0.40	0.00	0.00	0.55	0.17	0.33	0.00	0.68			
Avail Cap(c_a), veh/h	796	1937	0	0	1847	523	665	0	1187			
HCM Platoon Ratio	0.33	0.33	1.00	1.00	1.00	1.00	1.00	1.00	1.00			
Upstream Filter(I)	1.00	1.00	0.00	0.00	1.00	1.00	1.00	0.00	1.00			
Uniform Delay (d), s/veh	36.0	26.2	0.0	0.0	26.0	22.5	21.2	0.0	24.9			
Incr Delay (d2), s/veh	2.2	0.6	0.0	0.0	1.2	0.7	1.3	0.0	3.1			
Initial Q Delay(d3),s/veh	0.0	0.0	0.0	0.0	0.0	0.0	0.0	0.0	0.0			
%ile Back of Q (50%), veh/ln	5.2	9.1	0.0	0.0	6.7	1.5	3.9	0.0	8.5			
Lane Grp Delay (d), s/veh	38.2	26.9	0.0	0.0	27.2	23.2	22.5	0.0	28.1			
Lane Grp LOS	D	C			C	C	C		C			
Approach Vol, veh/h		1180			1103			1023				
Approach Delay, s/veh		30.7			26.9			26.9				
Approach LOS		C			C			C				

Timer												
Assigned Phs	5	2			6			8				
Phs Duration (G+Y+Rc), s	18.0	54.0			36.0			41.0				
Change Period (Y+Rc), s	4.6	4.6			4.6			5.4				
Max Green Setting (Gmax), s	13.4	49.4			31.4			35.6				
Max Q Clear Time (g_c+I1), s	4.0	19.8			16.1			22.3				
Green Ext Time (p_c), s	2.7	3.5			3.8			1.4				

Intersection Summary												
HCM 2010 Ctrl Delay			28.2									
HCM 2010 LOS			C									

Notes

User approved volume balancing among the lanes for turning movement.

Intersection	
Intersection Delay, s/veh	1.7

Movement	EBT	EBR	WBL	WBT	NBL	NBR
Vol, veh/h	1050	35	15	790	20	25
Conflicting Peds, #/hr	0	0	0	0	0	0
Sign Control	Free	Free	Free	Free	Stop	Stop
RT Channelized	-	None	-	None	-	None
Storage Length	-	-	200	-	-	-
Veh in Median Storage, #	0	-	-	0	0	-
Grade, %	0	-	-	0	0	-
Peak Hour Factor	92	92	92	92	92	92
Heavy Vehicles, %	2	2	2	2	2	2
Mvmt Flow	1141	38	16	859	22	27

Major/Minor	Major1		Major2		Minor1	
Conflicting Flow All	0	0	1179	0	2051	1160
Stage 1	-	-	-	-	1160	-
Stage 2	-	-	-	-	891	-
Follow-up Headway	-	-	2.218	-	3.518	3.318
Pot Capacity-1 Maneuver	-	-	592	-	61	238
Stage 1	-	-	-	-	298	-
Stage 2	-	-	-	-	401	-
Time blocked-Platoon, %	-	-		-		
Mov Capacity-1 Maneuver	-	-	592	-	59	238
Mov Capacity-2 Maneuver	-	-	-	-	59	-
Stage 1	-	-	-	-	298	-
Stage 2	-	-	-	-	390	-

Approach	EB	WB	NB
HCM Control Delay, s	0	0.2	70.3
HCM LOS			F

Minor Lane / Major Mvmt	NBLn1	EBT	EBR	WBL	WBT
Capacity (veh/h)	101	-	-	592	-
HCM Lane V/C Ratio	0.484	-	-	0.028	-
HCM Control Delay (s)	70.3	-	-	11.253	-
HCM Lane LOS	F			B	
HCM 95th %tile Q(veh)	2.124	-	-	0.085	-

Notes
~ : Volume Exceeds Capacity; $: Delay Exceeds 300 Seconds; Error : Computation Not Defined

Movement	EBL	EBT	EBR	WBL	WBT	WBR	NBL	NBT	NBR	SBL	SBT	SBR
Lane Configurations												
Volume (veh/h)	530	410	10	10	195	90	10	10	10	195	10	475
Number	5	2	12	1	6	16	3	8	18	7	4	14
Initial Q (Qb), veh	0	0	0	0	0	0	0	0	0	0	0	0
Ped-Bike Adj(A_pbT)	1.00		1.00	1.00		1.00	1.00		1.00	1.00		1.00
Parking Bus Adj	1.00	1.00	1.00	1.00	1.00	1.00	1.00	1.00	1.00	1.00	1.00	1.00
Adj Sat Flow veh/h/ln	186.3	186.3	190.0	186.3	186.3	186.3	190.0	186.3	190.0	190.0	186.3	186.3
Lanes	1	1	0	1	1	1	0	1	0	0	1	1
Cap, veh/h	631	776	19	279	337	287	79	78	49	346	14	1012
Arrive On Green	0.26	0.43	0.43	0.01	0.18	0.18	0.38	0.38	0.38	0.38	0.38	0.38
Sat Flow, veh/h	1774	1810	45	1774	1863	1583	56	205	130	691	36	1583
Grp Volume(v), veh/h	576	0	457	11	212	98	33	0	0	223	0	516
Grp Sat Flow(s),veh/h/ln	1774	0	1855	1774	1863	1583	391	0	0	727	0	1583
Q Serve(g_s), s	17.8	0.0	15.5	0.4	8.7	4.5	0.6	0.0	0.0	0.0	0.0	14.5
Cycle Q Clear(g_c), s	17.8	0.0	15.5	0.4	8.7	4.5	27.9	0.0	0.0	27.3	0.0	14.5
Prop In Lane	1.00		0.02	1.00		1.00	0.33		0.33	0.95		1.00
Lane Grp Cap(c), veh/h	631	0	795	279	337	287	206	0	0	360	0	1012
V/C Ratio(X)	0.91	0.00	0.57	0.04	0.63	0.34	0.16	0.00	0.00	0.62	0.00	0.51
Avail Cap(c_a), veh/h	939	0	1180	363	488	415	301	0	0	463	0	1128
HCM Platoon Ratio	1.00	1.00	1.00	1.00	1.00	1.00	1.00	1.00	1.00	1.00	1.00	1.00
Upstream Filter(I)	1.00	0.00	1.00	1.00	1.00	1.00	1.00	0.00	0.00	1.00	0.00	1.00
Uniform Delay (d), s/veh	19.3	0.0	17.9	27.0	31.3	29.6	19.7	0.0	0.0	24.5	0.0	8.0
Incr Delay (d2), s/veh	9.5	0.0	0.5	0.0	1.4	0.5	0.1	0.0	0.0	0.7	0.0	0.1
Initial Q Delay(d3),s/veh	0.0	0.0	0.0	0.0	0.0	0.0	0.0	0.0	0.0	0.0	0.0	0.0
%ile Back of Q (50%), veh/ln	13.7	0.0	7.0	0.2	4.1	1.8	0.4	0.0	0.0	4.3	0.0	4.9
Lane Grp Delay (d), s/veh	28.7	0.0	18.4	27.1	32.8	30.1	19.8	0.0	0.0	25.2	0.0	8.2
Lane Grp LOS	C		B	C	C	C	B			C		A
Approach Vol, veh/h		1033			321			33			739	
Approach Delay, s/veh		24.2			31.8			19.8			13.3	
Approach LOS		C			C			B			B	

Timer												
Assigned Phs	5	2		1	6			8			4	
Phs Duration (G+Y+Rc), s	25.6	40.8		5.1	20.3			36.9			36.9	
Change Period (Y+Rc), s	4.0	5.3		4.0	5.3			5.6			5.6	
Max Green Setting (Gmax), s	36.0	52.7		5.0	21.7			37.4			37.4	
Max Q Clear Time (g_c+I1), s	19.8	17.5		2.4	10.7			29.9			29.3	
Green Ext Time (p_c), s	1.8	4.0		0.0	2.9			1.4			1.5	

Intersection Summary	
HCM 2010 Ctrl Delay	21.5
HCM 2010 LOS	C

Notes

Movement	EBL	EBT	EBR	WBL	WBT	WBR	NBL	NBT	NBR	SBL	SBT	SBR
Lane Configurations												
Volume (veh/h)	15	5	10	20	5	120	15	920	25	195	885	25
Number	7	4	14	3	8	18	5	2	12	1	6	16
Initial Q (Qb), veh	0	0	0	0	0	0	0	0	0	0	0	0
Ped-Bike Adj(A_pbT)	1.00		1.00	1.00		1.00	1.00		1.00	1.00		1.00
Parking Bus Adj	1.00	1.00	1.00	1.00	1.00	1.00	1.00	1.00	1.00	1.00	1.00	1.00
Adj Sat Flow veh/h/ln	190.0	186.3	190.0	186.3	186.3	190.0	186.3	186.3	190.0	186.3	186.3	186.3
Lanes	0	1	0	1	1	0	1	1	0	1	1	1
Cap, veh/h	79	30	34	125	8	199	397	1189	32	389	1499	1274
Arrive On Green	0.13	0.13	0.13	0.13	0.13	0.13	0.66	0.66	0.66	0.11	0.80	0.80
Sat Flow, veh/h	271	228	262	1392	59	1533	567	1805	49	1774	1863	1583
Grp Volume(v), veh/h	32	0	0	22	0	135	16	0	1027	212	962	27
Grp Sat Flow(s),veh/h/ln	761	0	0	1392	0	1592	567	0	1854	1774	1863	1583
Q Serve(g_s), s	0.2	0.0	0.0	1.9	0.0	9.9	1.4	0.0	52.1	3.5	25.6	0.4
Cycle Q Clear(g_c), s	10.1	0.0	0.0	12.0	0.0	9.9	9.1	0.0	52.1	3.5	25.6	0.4
Prop In Lane	0.50		0.34	1.00		0.96	1.00		0.03	1.00		1.00
Lane Grp Cap(c), veh/h	143	0	0	125	0	207	397	0	1221	389	1499	1274
V/C Ratio(X)	0.22	0.00	0.00	0.18	0.00	0.65	0.04	0.00	0.84	0.55	0.64	0.02
Avail Cap(c_a), veh/h	143	0	0	125	0	207	397	0	1221	389	1499	1274
HCM Platoon Ratio	1.00	1.00	1.00	1.00	1.00	1.00	1.00	1.00	1.00	1.00	1.00	1.00
Upstream Filter(I)	1.00	0.00	0.00	1.00	0.00	1.00	1.00	0.00	1.00	1.00	1.00	1.00
Uniform Delay (d), s/veh	47.7	0.0	0.0	56.6	0.0	50.9	10.3	0.0	16.1	22.4	4.8	2.4
Incr Delay (d2), s/veh	3.6	0.0	0.0	3.0	0.0	14.9	0.2	0.0	7.1	5.4	2.1	0.0
Initial Q Delay(d3),s/veh	0.0	0.0	0.0	0.0	0.0	0.0	0.0	0.0	0.0	0.0	0.0	0.0
%ile Back of Q (50%), veh/ln	1.0	0.0	0.0	0.8	0.0	4.9	0.2	0.0	24.7	5.1	10.2	0.1
Lane Grp Delay (d), s/veh	51.3	0.0	0.0	59.7	0.0	65.7	10.5	0.0	23.2	27.8	7.0	2.4
Lane Grp LOS	D			E		E	B		C	C	A	A
Approach Vol, veh/h		32			157			1043			1201	
Approach Delay, s/veh		51.3			64.9			23.0			10.5	
Approach LOS		D			E			C			B	

Timer					
Assigned Phs	4	8	2	1	6
Phs Duration (G+Y+Rc), s	20.0	20.0	85.0	18.0	103.0
Change Period (Y+Rc), s	4.0	4.0	4.0	4.0	4.0
Max Green Setting (Gmax), s	16.0	16.0	81.0	14.0	99.0
Max Q Clear Time (g_c+I1), s	12.1	14.0	54.1	5.5	27.6
Green Ext Time (p_c), s	0.3	0.2	19.3	0.4	34.6

Intersection Summary	
HCM 2010 Ctrl Delay	19.9
HCM 2010 LOS	B

Notes

Movement	SEL	SET	NWT	NWR	SWL	SWR
Lane Configurations						
Volume (veh/h)	455	845	1070	175	100	270
Number	1	6	2	12	3	18
Initial Q (Qb), veh	0	0	0	0	0	0
Ped-Bike Adj(A_pbT)	1.00			1.00	1.00	1.00
Parking Bus Adj	1.00	1.00	1.00	1.00	1.00	1.00
Adj Sat Flow veh/h/ln	186.3	186.3	186.3	190.0	186.3	186.3
Lanes	1	2	2	0	1	1
Cap, veh/h	541	2799	1528	248	294	263
Arrive On Green	0.22	0.75	0.49	0.49	0.17	0.17
Sat Flow, veh/h	1774	3725	3127	509	1774	1583
Grp Volume(v), veh/h	495	918	691	662	109	293
Grp Sat Flow(s),veh/h/ln	1774	1863	1863	1773	1774	1583
Q Serve(g_s), s	17.9	7.8	29.1	29.4	5.3	16.0
Cycle Q Clear(g_c), s	17.9	7.8	29.1	29.4	5.3	16.0
Prop In Lane	1.00			0.29	1.00	1.00
Lane Grp Cap(c), veh/h	541	2799	910	866	294	263
V/C Ratio(X)	0.92	0.33	0.76	0.76	0.37	1.12
Avail Cap(c_a), veh/h	792	3513	1004	955	294	263
HCM Platoon Ratio	1.00	1.00	1.00	1.00	1.00	1.00
Upstream Filter(I)	1.00	1.00	1.00	1.00	1.00	1.00
Uniform Delay (d), s/veh	24.4	4.0	20.1	20.1	35.8	40.2
Incr Delay (d2), s/veh	11.4	0.1	3.1	3.4	0.8	90.3
Initial Q Delay(d3),s/veh	0.0	0.0	0.0	0.0	0.0	0.0
%ile Back of Q (50%), veh/ln	13.8	2.8	13.8	13.3	2.4	13.0
Lane Grp Delay (d), s/veh	35.8	4.0	23.2	23.5	36.5	130.6
Lane Grp LOS	D	A	C	C	D	F
Approach Vol, veh/h		1413	1353		402	
Approach Delay, s/veh		15.2	23.3		105.1	
Approach LOS		B	C		F	

Timer			
Assigned Phs	1	6	2
Phs Duration (G+Y+Rc), s	25.4	76.5	51.1
Change Period (Y+Rc), s	4.0	4.0	4.0
Max Green Setting (Gmax), s	35.0	91.0	52.0
Max Q Clear Time (g_c+I1), s	19.9	9.8	31.4
Green Ext Time (p_c), s	1.5	36.0	15.7

Intersection Summary	
HCM 2010 Ctrl Delay	30.1
HCM 2010 LOS	C

Notes

APPENDIX F 2025 TOTAL LEVEL OF SERVICE WORKSHEETS

Movement	SEL	SET	SER	NWL	NWT	NWR	NEL	NET	NER	SWL	SWT	SWR
Lane Configurations												
Volume (veh/h)	375	895	285	265	1000	230	275	755	280	295	670	250
Number	7	4	14	3	8	18	5	2	12	1	6	16
Initial Q (Qb), veh	0	0	0	0	0	0	0	0	0	0	0	0
Ped-Bike Adj(A_pbT)	1.00		1.00	1.00		1.00	1.00		1.00	1.00		1.00
Parking Bus Adj	1.00	1.00	1.00	1.00	1.00	1.00	1.00	1.00	1.00	1.00	1.00	1.00
Adj Sat Flow veh/h/ln	186.3	186.3	186.3	186.3	186.3	186.3	186.3	186.3	186.3	186.3	186.3	186.3
Lanes	2	2	1	2	2	1	2	2	1	2	2	1
Cap, veh/h	437	1265	537	347	1166	496	364	931	396	386	954	406
Arrive On Green	0.13	0.34	0.34	0.10	0.31	0.31	0.11	0.25	0.25	0.11	0.26	0.26
Sat Flow, veh/h	3442	3725	1583	3442	3725	1583	3442	3725	1583	3442	3725	1583
Grp Volume(v), veh/h	408	973	310	288	1087	250	299	821	304	321	728	272
Grp Sat Flow(s),veh/h/ln	1721	1863	1583	1721	1863	1583	1721	1863	1583	1721	1863	1583
Q Serve(g_s), s	12.9	25.7	17.7	9.0	31.2	14.2	9.4	23.4	19.6	10.1	19.9	17.0
Cycle Q Clear(g_c), s	12.9	25.7	17.7	9.0	31.2	14.2	9.4	23.4	19.6	10.1	19.9	17.0
Prop In Lane	1.00		1.00	1.00		1.00	1.00		1.00	1.00		1.00
Lane Grp Cap(c), veh/h	437	1265	537	347	1166	496	364	931	396	386	954	406
V/C Ratio(X)	0.93	0.77	0.58	0.83	0.93	0.50	0.82	0.88	0.77	0.83	0.76	0.67
Avail Cap(c_a), veh/h	437	1265	537	375	1187	504	656	950	404	656	954	406
HCM Platoon Ratio	1.00	1.00	1.00	1.00	1.00	1.00	1.00	1.00	1.00	1.00	1.00	1.00
Upstream Filter(I)	1.00	1.00	1.00	1.00	1.00	1.00	1.00	1.00	1.00	1.00	1.00	1.00
Uniform Delay (d), s/veh	47.6	32.5	29.9	48.6	36.7	30.9	48.2	39.8	38.4	47.9	37.9	36.8
Incr Delay (d2), s/veh	26.6	2.7	1.0	12.6	12.7	0.3	1.8	9.5	8.2	1.8	3.5	3.9
Initial Q Delay(d3),s/veh	0.0	0.0	0.0	0.0	0.0	0.0	0.0	0.0	0.0	0.0	0.0	0.0
%ile Back of Q (50%), veh/ln	7.4	12.5	7.2	4.6	16.7	5.6	4.2	12.3	8.7	4.6	9.9	7.2
Lane Grp Delay (d), s/veh	74.2	35.2	30.9	61.2	49.4	31.2	50.0	49.2	46.6	49.7	41.4	40.7
Lane Grp LOS	E	D	C	E	D	C	D	D	D	D	D	D
Approach Vol, veh/h		1691			1625			1424			1321	
Approach Delay, s/veh		43.8			48.7			48.8			43.3	
Approach LOS		D			D			D			D	

Timer												
Assigned Phs	7	4		3	8		5	2		1	6	
Phs Duration (G+Y+Rc), s	19.0	43.3		16.1	40.4		16.7	33.4		17.4	34.1	
Change Period (Y+Rc), s	5.0	5.9		5.0	5.9		5.0	5.9		5.0	5.9	
Max Green Setting (Gmax), s	14.0	37.1		12.0	35.1		21.0	28.1		21.0	28.1	
Max Q Clear Time (g_c+I1), s	14.9	27.7		11.0	33.2		11.4	25.4		12.1	21.9	
Green Ext Time (p_c), s	0.0	6.2		0.0	1.3		0.3	2.2		0.3	4.7	

Intersection Summary	
HCM 2010 Ctrl Delay	46.2
HCM 2010 LOS	D

Notes

Movement	SEL	SET	SER	NWL	NWT	NWR	NEL	NET	NER	SWL	SWT	SWR
Lane Configurations												
Volume (veh/h)	70	1190	455	140	1045	145	515	195	180	245	175	105
Number	7	4	14	3	8	18	5	2	12	1	6	16
Initial Q (Qb), veh	0	0	0	0	0	0	0	0	0	0	0	0
Ped-Bike Adj(A_pbT)	1.00		1.00	1.00		1.00	1.00		1.00	1.00		1.00
Parking Bus Adj	1.00	1.00	1.00	1.00	1.00	1.00	1.00	1.00	1.00	1.00	1.00	1.00
Adj Sat Flow veh/h/ln	186.3	186.3	186.3	186.3	186.3	190.0	186.3	186.3	186.3	186.3	186.3	186.3
Lanes	1	2	1	1	2	0	2	1	1	1	1	1
Cap, veh/h	194	1527	936	191	1334	185	624	344	293	411	278	236
Arrive On Green	0.04	0.41	0.41	0.05	0.42	0.42	0.18	0.18	0.18	0.15	0.15	0.15
Sat Flow, veh/h	1774	3725	1583	1774	3203	444	3442	1863	1583	1774	1863	1583
Grp Volume(v), veh/h	76	1293	495	152	659	635	560	212	196	266	190	114
Grp Sat Flow(s),veh/h/ln	1774	1863	1583	1774	1863	1784	1721	1863	1583	1774	1863	1583
Q Serve(g_s), s	2.4	30.3	18.0	4.8	30.9	31.2	15.4	10.1	11.1	12.0	9.4	6.4
Cycle Q Clear(g_c), s	2.4	30.3	18.0	4.8	30.9	31.2	15.4	10.1	11.1	12.0	9.4	6.4
Prop In Lane	1.00		1.00	1.00		0.25	1.00		1.00	1.00		1.00
Lane Grp Cap(c), veh/h	194	1527	936	191	776	743	624	344	293	411	278	236
V/C Ratio(X)	0.39	0.85	0.53	0.79	0.85	0.85	0.90	0.62	0.67	0.65	0.68	0.48
Avail Cap(c_a), veh/h	206	1548	945	191	776	743	640	572	486	428	514	437
HCM Platoon Ratio	1.00	1.00	1.00	1.00	1.00	1.00	1.00	1.00	1.00	1.00	1.00	1.00
Upstream Filter(I)	1.00	1.00	1.00	1.00	1.00	1.00	1.00	1.00	1.00	1.00	1.00	1.00
Uniform Delay (d), s/veh	20.9	25.8	11.8	22.6	25.5	25.6	38.7	36.3	36.7	28.6	39.0	37.7
Incr Delay (d2), s/veh	1.3	4.5	0.5	20.1	8.9	9.5	15.2	1.8	2.6	3.2	3.0	1.5
Initial Q Delay(d3),s/veh	0.0	0.0	0.0	0.0	0.0	0.0	0.0	0.0	0.0	0.0	0.0	0.0
%ile Back of Q (50%), veh/ln	1.1	15.0	6.5	4.8	16.0	15.5	8.1	4.9	4.7	5.6	4.7	2.6
Lane Grp Delay (d), s/veh	22.2	30.3	12.3	42.7	34.3	35.1	53.9	38.1	39.3	31.8	42.0	39.3
Lane Grp LOS	C	C	B	D	C	D	D	D	D	C	D	D
Approach Vol, veh/h		1864			1446			968			570	
Approach Delay, s/veh		25.2			35.5			47.5			36.7	
Approach LOS		C			D			D			D	

Timer												
Assigned Phs	7	4		3	8		5	2		1	6	
Phs Duration (G+Y+Rc), s	8.4	45.5		9.0	46.1		21.6	24.2		18.1	20.7	
Change Period (Y+Rc), s	4.0	5.8		4.0	5.8		4.0	6.3		4.0	6.3	
Max Green Setting (Gmax), s	5.0	40.2		5.0	40.2		18.0	29.7		15.0	26.7	
Max Q Clear Time (g_c+I1), s	4.4	32.3		6.8	33.2		17.4	13.1		14.0	11.4	
Green Ext Time (p_c), s	0.0	7.3		0.0	6.7		0.2	3.2		0.1	3.1	

Intersection Summary	
HCM 2010 Ctrl Delay	34.1
HCM 2010 LOS	C

Notes

Movement	EBL	EBT	EBR	WBL	WBT	WBR	NBL	NBT	NBR	SBL	SBT	SBR
Lane Configurations												
Volume (veh/h)	10	1070	675	265	860	5	460	15	265	15	10	5
Number	5	2	12	1	6	16	3	8	18	7	4	14
Initial Q (Qb), veh	0	0	0	0	0	0	0	0	0	0	0	0
Ped-Bike Adj(A_pbT)	1.00		1.00	1.00		1.00	1.00		1.00	1.00		1.00
Parking Bus Adj	1.00	1.00	1.00	1.00	1.00	1.00	1.00	1.00	1.00	1.00	1.00	1.00
Adj Sat Flow veh/h/ln	186.3	186.3	186.3	186.3	186.3	186.3	186.3	186.3	186.3	186.3	186.3	186.3
Lanes	1	2	1	1	2	1	2	1	1	1	1	1
Cap, veh/h	351	1642	958	316	2247	955	565	354	583	149	87	74
Arrive On Green	0.02	0.44	0.44	0.18	0.60	0.60	0.16	0.19	0.19	0.02	0.05	0.05
Sat Flow, veh/h	1774	3725	1583	1774	3725	1583	3442	1863	1583	1774	1863	1583
Grp Volume(v), veh/h	11	1163	734	288	935	5	500	16	288	16	11	5
Grp Sat Flow(s),veh/h/ln	1774	1863	1583	1774	1863	1583	1721	1863	1583	1774	1863	1583
Q Serve(g_s), s	0.4	29.4	39.5	18.4	15.4	0.1	16.4	0.8	16.2	1.0	0.7	0.3
Cycle Q Clear(g_c), s	0.4	29.4	39.5	18.4	15.4	0.1	16.4	0.8	16.2	1.0	0.7	0.3
Prop In Lane	1.00		1.00	1.00		1.00	1.00		1.00	1.00		1.00
Lane Grp Cap(c), veh/h	351	1642	958	316	2247	955	565	354	583	149	87	74
V/C Ratio(X)	0.03	0.71	0.77	0.91	0.42	0.01	0.88	0.05	0.49	0.11	0.13	0.07
Avail Cap(c_a), veh/h	431	1685	976	368	2247	955	655	693	871	204	435	370
HCM Platoon Ratio	1.00	1.00	1.00	1.00	1.00	1.00	1.00	1.00	1.00	1.00	1.00	1.00
Upstream Filter(I)	1.00	1.00	1.00	1.00	1.00	1.00	1.00	1.00	1.00	1.00	1.00	1.00
Uniform Delay (d), s/veh	17.2	26.3	16.8	46.6	12.2	9.1	47.3	38.3	28.2	50.7	52.9	52.7
Incr Delay (d2), s/veh	0.0	1.4	3.6	22.5	0.1	0.0	12.0	0.0	0.5	0.1	0.2	0.1
Initial Q Delay(d3),s/veh	0.0	0.0	0.0	0.0	0.0	0.0	0.0	0.0	0.0	0.0	0.0	0.0
%ile Back of Q (50%), veh/ln	0.2	13.9	15.6	10.5	6.8	0.1	8.2	0.4	6.5	0.5	0.3	0.1
Lane Grp Delay (d), s/veh	17.2	27.7	20.5	69.2	12.3	9.1	59.2	38.3	28.7	50.9	53.1	52.9
Lane Grp LOS	B	C	C	E	B	A	E	D	C	D	D	D
Approach Vol, veh/h		1908			1228			804			32	
Approach Delay, s/veh		24.8			25.6			47.9			51.9	
Approach LOS		C			C			D			D	

Timer												
Assigned Phs	5	2		1	6		3	8		7	4	
Phs Duration (G+Y+Rc), s	5.8	57.1		24.6	75.9		23.0	27.6		6.4	11.0	
Change Period (Y+Rc), s	4.0	6.1		4.0	6.1		4.0	5.6		4.0	5.6	
Max Green Setting (Gmax), s	7.0	52.3		24.0	69.3		22.0	43.0		6.0	27.0	
Max Q Clear Time (g_c+I1), s	2.4	41.5		20.4	17.4		18.4	18.2		3.0	2.7	
Green Ext Time (p_c), s	0.0	9.5		0.2	35.0		0.6	0.8		0.0	0.8	

Intersection Summary	
HCM 2010 Ctrl Delay	30.0
HCM 2010 LOS	C

Notes

Movement	EBL	EBT	EBR	WBL	WBT	WBR	NBL	NBT	NBR	SBL	SBT	SBR
Lane Configurations												
Volume (veh/h)	5	1480	120	90	1115	5	145	5	150	5	0	5
Number	5	2	12	1	6	16	3	8	18	7	4	14
Initial Q (Qb), veh	0	0	0	0	0	0	0	0	0	0	0	0
Ped-Bike Adj(A_pbT)	1.00		1.00	1.00		1.00	1.00		1.00	1.00		1.00
Parking Bus Adj	1.00	1.00	1.00	1.00	1.00	1.00	1.00	1.00	1.00	1.00	1.00	1.00
Adj Sat Flow veh/h/ln	186.3	186.3	186.3	186.3	186.3	190.0	186.3	186.3	190.0	190.0	186.3	190.0
Lanes	1	2	1	1	2	0	1	1	0	0	1	0
Cap, veh/h	277	2088	887	234	2257	9	257	11	346	145	17	108
Arrive On Green	0.01	0.56	0.56	0.06	0.61	0.61	0.22	0.22	0.22	0.22	0.00	0.22
Sat Flow, veh/h	1774	3725	1583	1774	3707	15	1405	47	1543	406	76	482
Grp Volume(v), veh/h	5	1609	130	98	609	608	158	0	168	10	0	0
Grp Sat Flow(s),veh/h/ln	1774	1863	1583	1774	1863	1860	1405	0	1590	964	0	0
Q Serve(g_s), s	0.1	33.5	3.9	1.8	19.1	19.1	11.0	0.0	9.2	0.1	0.0	0.0
Cycle Q Clear(g_c), s	0.1	33.5	3.9	1.8	19.1	19.1	20.3	0.0	9.2	9.2	0.0	0.0
Prop In Lane	1.00		1.00	1.00		0.01	1.00		0.97	0.50		0.50
Lane Grp Cap(c), veh/h	277	2088	887	234	1134	1132	257	0	356	270	0	0
V/C Ratio(X)	0.02	0.77	0.15	0.42	0.54	0.54	0.61	0.00	0.47	0.04	0.00	0.00
Avail Cap(c_a), veh/h	369	2230	948	241	1134	1132	279	0	381	291	0	0
HCM Platoon Ratio	1.00	1.00	1.00	1.00	1.00	1.00	1.00	1.00	1.00	1.00	1.00	1.00
Upstream Filter(I)	1.00	1.00	1.00	1.00	1.00	1.00	1.00	0.00	1.00	1.00	0.00	0.00
Uniform Delay (d), s/veh	10.4	17.0	10.5	17.8	11.4	11.4	42.6	0.0	33.8	30.6	0.0	0.0
Incr Delay (d2), s/veh	0.0	1.6	0.1	1.2	0.5	0.5	2.2	0.0	0.4	0.1	0.0	0.0
Initial Q Delay(d3),s/veh	0.0	0.0	0.0	0.0	0.0	0.0	0.0	0.0	0.0	0.0	0.0	0.0
%ile Back of Q (50%), veh/ln	0.1	15.2	1.5	1.5	8.4	8.4	4.2	0.0	3.7	0.2	0.0	0.0
Lane Grp Delay (d), s/veh	10.4	18.7	10.6	19.0	11.9	11.9	44.8	0.0	34.1	30.7	0.0	0.0
Lane Grp LOS	B	B	B	B	B	B	D		C	C		
Approach Vol, veh/h		1744			1315			326			10	
Approach Delay, s/veh		18.0			12.4			39.3			30.7	
Approach LOS		B			B			D			C	

Timer												
Assigned Phs	5	2		1	6			8			4	
Phs Duration (G+Y+Rc), s	4.8	62.2		9.6	67.0			28.5			28.5	
Change Period (Y+Rc), s	4.0	6.0		4.0	6.0			6.0			6.0	
Max Green Setting (Gmax), s	6.0	60.0		6.0	60.0			24.0			24.0	
Max Q Clear Time (g_c+I1), s	2.1	35.5		3.8	21.1			22.3			11.2	
Green Ext Time (p_c), s	0.0	20.7		0.0	31.8			0.2			0.8	

Intersection Summary	
HCM 2010 Ctrl Delay	17.9
HCM 2010 LOS	B

Notes

Movement	EBL	EBT	EBR	WBL	WBT	WBR	NEL	NET	NER	SWL	SWT	SWR
Lane Configurations												
Volume (veh/h)	95	595	225	565	390	75	270	515	805	145	360	5
Number	5	2	12	1	6	16	3	8	18	7	4	14
Initial Q (Qb), veh	0	0	0	0	0	0	0	0	0	0	0	0
Ped-Bike Adj(A_pbT)	1.00		1.00	1.00		1.00	1.00		1.00	1.00		1.00
Parking Bus Adj	1.00	1.00	1.00	1.00	1.00	1.00	1.00	1.00	1.00	1.00	1.00	1.00
Adj Sat Flow veh/h/ln	186.3	186.3	186.3	186.3	186.3	190.0	186.3	186.3	186.3	186.3	186.3	190.0
Lanes	1	1	1	2	2	0	1	2	2	1	2	0
Cap, veh/h	127	686	583	634	1462	281	313	690	1169	180	403	5
Arrive On Green	0.07	0.37	0.37	0.18	0.48	0.48	0.18	0.19	0.19	0.10	0.11	0.11
Sat Flow, veh/h	1774	1863	1583	3442	3039	583	1774	3725	3167	1774	3670	47
Grp Volume(v), veh/h	103	647	245	614	259	247	293	560	875	158	198	198
Grp Sat Flow(s),veh/h/ln	1774	1863	1583	1721	1863	1760	1774	1863	1583	1774	1863	1854
Q Serve(g_s), s	8.4	49.3	16.9	26.0	12.3	12.4	23.9	21.1	27.1	12.9	15.5	15.6
Cycle Q Clear(g_c), s	8.4	49.3	16.9	26.0	12.3	12.4	23.9	21.1	27.1	12.9	15.5	15.6
Prop In Lane	1.00		1.00	1.00		0.33	1.00		1.00	1.00		0.03
Lane Grp Cap(c), veh/h	127	686	583	634	896	846	313	690	1169	180	205	204
V/C Ratio(X)	0.81	0.94	0.42	0.97	0.29	0.29	0.94	0.81	0.75	0.88	0.97	0.97
Avail Cap(c_a), veh/h	194	728	619	634	896	846	315	690	1169	182	205	204
HCM Platoon Ratio	1.00	1.00	1.00	1.00	1.00	1.00	1.00	1.00	1.00	1.00	1.00	1.00
Upstream Filter(I)	1.00	1.00	1.00	1.00	1.00	1.00	1.00	1.00	1.00	1.00	1.00	1.00
Uniform Delay (d), s/veh	67.1	44.8	34.6	59.4	22.9	23.0	59.5	57.3	40.3	65.0	65.0	65.0
Incr Delay (d2), s/veh	14.0	20.1	0.5	28.0	0.2	0.2	34.1	7.3	2.7	35.1	53.9	54.4
Initial Q Delay(d3),s/veh	0.0	0.0	0.0	0.0	0.0	0.0	0.0	0.0	0.0	0.0	0.0	0.0
%ile Back of Q (50%), veh/ln	4.4	27.4	6.9	14.1	5.9	5.6	14.0	11.0	14.7	7.8	10.7	10.7
Lane Grp Delay (d), s/veh	81.0	64.9	35.1	87.3	23.1	23.2	93.6	64.6	43.0	100.1	118.9	119.5
Lane Grp LOS	F	E	D	F	C	C	F	E	D	F	F	F
Approach Vol, veh/h		995			1120			1728			554	
Approach Delay, s/veh		59.2			58.3			58.6			113.7	
Approach LOS		E			E			E			F	

Timer												
Assigned Phs	5	2		1	6		3	8		7	4	
Phs Duration (G+Y+Rc), s	14.5	61.7		31.0	78.2		29.9	35.0		18.9	24.0	
Change Period (Y+Rc), s	4.0	7.7		4.0	7.7		4.0	7.9		4.0	7.9	
Max Green Setting (Gmax), s	16.0	57.3		27.0	68.3		26.0	27.1		15.0	16.1	
Max Q Clear Time (g_c+I1), s	10.4	51.3		28.0	14.4		25.9	29.1		14.9	17.6	
Green Ext Time (p_c), s	0.1	2.7		0.0	11.6		0.0	0.0		0.0	0.0	

Intersection Summary	
HCM 2010 Ctrl Delay	65.6
HCM 2010 LOS	E

Notes

Movement	EBL	EBT	EBR	WBL	WBT	WBR	NEL	NET	NER	SWL	SWT	SWR
Lane Configurations												
Volume (veh/h)	95	595	225	565	390	75	270	515	805	145	360	5
Number	5	2	12	1	6	16	3	8	18	7	4	14
Initial Q (Qb), veh	0	0	0	0	0	0	0	0	0	0	0	0
Ped-Bike Adj(A_pbT)	1.00		1.00	1.00		1.00	1.00		1.00	1.00		1.00
Parking Bus Adj	1.00	1.00	1.00	1.00	1.00	1.00	1.00	1.00	1.00	1.00	1.00	1.00
Adj Sat Flow veh/h/ln	186.3	186.3	190.0	186.3	186.3	190.0	186.3	186.3	186.3	186.3	186.3	190.0
Lanes	1	2	0	2	2	0	1	2	2	1	2	0
Cap, veh/h	128	769	291	678	1285	247	319	863	1358	182	568	7
Arrive On Green	0.07	0.30	0.30	0.20	0.42	0.42	0.18	0.23	0.23	0.10	0.15	0.15
Sat Flow, veh/h	1774	2578	976	3442	3039	583	1774	3725	3167	1774	3670	47
Grp Volume(v), veh/h	103	467	425	614	259	247	293	560	875	158	198	198
Grp Sat Flow(s),veh/h/ln	1774	1863	1691	1721	1863	1760	1774	1863	1583	1774	1863	1854
Q Serve(g_s), s	7.9	32.6	32.6	24.1	12.9	13.1	22.5	18.8	30.2	12.2	13.9	14.0
Cycle Q Clear(g_c), s	7.9	32.6	32.6	24.1	12.9	13.1	22.5	18.8	30.2	12.2	13.9	14.0
Prop In Lane	1.00		0.58	1.00		0.33	1.00		1.00	1.00		0.03
Lane Grp Cap(c), veh/h	128	555	504	678	787	744	319	863	1358	182	288	287
V/C Ratio(X)	0.80	0.84	0.84	0.91	0.33	0.33	0.92	0.65	0.64	0.87	0.69	0.69
Avail Cap(c_a), veh/h	205	623	565	770	824	779	384	863	1358	218	288	287
HCM Platoon Ratio	1.00	1.00	1.00	1.00	1.00	1.00	1.00	1.00	1.00	1.00	1.00	1.00
Upstream Filter(I)	1.00	1.00	1.00	1.00	1.00	1.00	1.00	1.00	1.00	1.00	1.00	1.00
Uniform Delay (d), s/veh	63.3	45.5	45.5	54.3	26.8	26.8	55.8	48.1	31.2	61.2	55.4	55.4
Incr Delay (d2), s/veh	11.1	9.3	10.2	13.2	0.2	0.3	24.1	1.7	1.1	25.7	6.7	6.8
Initial Q Delay(d3),s/veh	0.0	0.0	0.0	0.0	0.0	0.0	0.0	0.0	0.0	0.0	0.0	0.0
%ile Back of Q (50%), veh/ln	4.1	17.1	15.7	12.1	6.1	5.8	12.6	9.3	12.2	7.0	7.4	7.4
Lane Grp Delay (d), s/veh	74.4	54.8	55.7	67.6	27.0	27.1	79.9	49.8	32.3	86.9	62.1	62.2
Lane Grp LOS	E	D	E	E	C	C	E	D	C	F	E	E
Approach Vol, veh/h		995			1120			1728			554	
Approach Delay, s/veh		57.2			49.3			46.0			69.2	
Approach LOS		E			D			D			E	

Timer												
Assigned Phs	5	2		1	6		3	8		7	4	
Phs Duration (G+Y+Rc), s	14.0	49.0		31.3	66.3		28.9	40.0		18.2	29.3	
Change Period (Y+Rc), s	4.0	7.7		4.0	7.7		4.0	7.9		4.0	7.9	
Max Green Setting (Gmax), s	16.0	46.3		31.0	61.3		30.0	32.1		17.0	19.1	
Max Q Clear Time (g_c+I1), s	9.9	34.6		26.1	15.1		24.5	32.2		14.2	16.0	
Green Ext Time (p_c), s	0.1	6.7		1.1	12.5		0.4	0.0		0.1	2.5	

Intersection Summary	
HCM 2010 Ctrl Delay	52.3
HCM 2010 LOS	D

Notes

Movement	EBL	EBT	EBR	WBL	WBT	WBR	NBL	NBT	NBR	SBL	SBT	SBR
Lane Configurations												
Volume (veh/h)	0	1360	360	490	1190	0	0	0	0	95	5	295
Number	5	2	12	1	6	16				7	4	14
Initial Q (Qb), veh	0	0	0	0	0	0				0	0	0
Ped-Bike Adj(A_pbT)	1.00		1.00	1.00		1.00				1.00		1.00
Parking Bus Adj	1.00	1.00	1.00	1.00	1.00	1.00				1.00	1.00	1.00
Adj Sat Flow veh/h/ln	0.0	186.3	186.3	186.3	186.3	0.0				186.3	186.3	186.3
Lanes	0	3	1	2	2	0				1	0	2
Cap, veh/h	0	2671	757	1004	2682	0				308	0	550
Arrive On Green	0.00	0.48	0.00	0.19	0.72	0.00				0.17	0.00	0.17
Sat Flow, veh/h	0	5588	1583	3442	3725	0				1774	0	3167
Grp Volume(v), veh/h	0	1478	0	533	1293	0				70	0	359
Grp Sat Flow(s),veh/h/ln	0	1863	1583	1721	1863	0				1774	0	1583
Q Serve(g_s), s	0.0	17.8	0.0	3.0	14.1	0.0				3.2	0.0	10.0
Cycle Q Clear(g_c), s	0.0	17.8	0.0	3.0	14.1	0.0				3.2	0.0	10.0
Prop In Lane	0.00		1.00	1.00		0.00				1.00		1.00
Lane Grp Cap(c), veh/h	0	2671	757	1004	2682	0				308	0	550
V/C Ratio(X)	0.00	0.55	0.00	0.53	0.48	0.00				0.23	0.00	0.65
Avail Cap(c_a), veh/h	0	2671	757	1004	2682	0				308	0	550
HCM Platoon Ratio	1.00	1.00	1.00	1.00	1.00	1.00				1.00	1.00	1.00
Upstream Filter(I)	0.00	1.00	0.00	1.00	1.00	0.00				1.00	0.00	1.00
Uniform Delay (d), s/veh	0.0	17.6	0.0	26.7	5.7	0.0				33.8	0.0	36.6
Incr Delay (d2), s/veh	0.0	0.8	0.0	2.0	0.6	0.0				1.7	0.0	5.9
Initial Q Delay(d3),s/veh	0.0	0.0	0.0	0.0	0.0	0.0				0.0	0.0	0.0
%ile Back of Q (50%), veh/ln	0.0	8.1	0.0	5.9	5.6	0.0				1.6	0.0	4.5
Lane Grp Delay (d), s/veh	0.0	18.4	0.0	28.7	6.3	0.0				35.5	0.0	42.5
Lane Grp LOS		B		C	A					D		D
Approach Vol, veh/h		1478			1826						429	
Approach Delay, s/veh		18.4			12.9						41.4	
Approach LOS		B			B						D	

Timer			
Assigned Phs	2	1	6	4
Phs Duration (G+Y+Rc), s	50.0	23.0	73.0	22.0
Change Period (Y+Rc), s	4.6	4.6	4.6	5.5
Max Green Setting (Gmax), s	45.4	18.4	68.4	16.5
Max Q Clear Time (g_c+I1), s	19.8	5.0	16.1	12.0
Green Ext Time (p_c), s	6.8	5.4	7.2	0.3

Intersection Summary	
HCM 2010 Ctrl Delay	18.3
HCM 2010 LOS	B

Notes

User approved volume balancing among the lanes for turning movement.

Movement	EBL	EBT	EBR	WBL	WBT	WBR	NBL	NBT	NBR	SBL	SBT	SBR
Lane Configurations												
Volume (veh/h)	365	1090	0	0	1380	120	300	0	835	0	0	0
Number	5	2	12	1	6	16	3	8	18			
Initial Q (Qb), veh	0	0	0	0	0	0	0	0	0			
Ped-Bike Adj(A_pbT)	1.00		1.00	1.00		1.00	1.00		1.00			
Parking Bus Adj	1.00	1.00	1.00	1.00	1.00	1.00	1.00	1.00	1.00			
Adj Sat Flow veh/h/ln	186.3	186.3	0.0	0.0	186.3	186.3	186.3	186.3	186.3			
Lanes	2	2	0	0	3	1	1	0	2			
Cap, veh/h	561	1851	0	0	1895	537	629	0	1122			
Arrive On Green	0.09	0.50	0.00	0.00	0.34	0.34	0.35	0.00	0.35			
Sat Flow, veh/h	3442	3725	0	0	5588	1583	1774	0	3167			
Grp Volume(v), veh/h	397	1185	0	0	1500	130	217	0	1024			
Grp Sat Flow(s),veh/h/ln	1721	1863	0	0	1863	1583	1774	0	1583			
Q Serve(g_s), s	2.4	15.8	0.0	0.0	16.3	4.0	6.0	0.0	20.7			
Cycle Q Clear(g_c), s	2.4	15.8	0.0	0.0	16.3	4.0	6.0	0.0	20.7			
Prop In Lane	1.00		0.00	0.00		1.00	1.00		1.00			
Lane Grp Cap(c), veh/h	561	1851	0	0	1895	537	629	0	1122			
V/C Ratio(X)	0.71	0.64	0.00	0.00	0.79	0.24	0.35	0.00	0.91			
Avail Cap(c_a), veh/h	582	2128	0	0	2278	645	702	0	1253			
HCM Platoon Ratio	1.00	1.00	1.00	1.00	1.00	1.00	1.00	1.00	1.00			
Upstream Filter(I)	1.00	1.00	0.00	0.00	1.00	1.00	1.00	0.00	1.00			
Uniform Delay (d), s/veh	28.0	12.5	0.0	0.0	20.1	16.0	16.0	0.0	20.7			
Incr Delay (d2), s/veh	3.1	0.3	0.0	0.0	1.3	0.1	0.1	0.0	9.0			
Initial Q Delay(d3),s/veh	0.0	0.0	0.0	0.0	0.0	0.0	0.0	0.0	0.0			
%ile Back of Q (50%), veh/ln	3.5	6.5	0.0	0.0	7.3	1.5	2.6	0.0	9.1			
Lane Grp Delay (d), s/veh	31.1	12.8	0.0	0.0	21.4	16.1	16.1	0.0	29.7			
Lane Grp LOS	C	B			C	B	B		C			
Approach Vol, veh/h		1582			1630			1241				
Approach Delay, s/veh		17.4			21.0			27.3				
Approach LOS		B			C			C				

Timer												
Assigned Phs	5	2			6			8				
Phs Duration (G+Y+Rc), s	10.6	38.0			27.4			29.2				
Change Period (Y+Rc), s	4.6	4.6			4.6			5.4				
Max Green Setting (Gmax), s	6.4	38.4			27.4			26.6				
Max Q Clear Time (g_c+I1), s	4.4	17.8			18.3			22.7				
Green Ext Time (p_c), s	1.2	5.5			4.5			1.1				

Intersection Summary	
HCM 2010 Ctrl Delay	21.5
HCM 2010 LOS	C

Notes

User approved volume balancing among the lanes for turning movement.

MOVEMENT SUMMARY

Site: Butler/Herold Ranch 2025 Project

Butler Avenue/Herold Ranch Road
Roundabout

Movement Performance - Vehicles

Mov ID	Turn	Demand Flow veh/h	HV %	Deg. Satn v/c	Average Delay sec	Level of Service	95% Back of Queue Vehicles veh	95% Back of Queue Distance ft	Prop. Queued	Effective Stop Rate per veh	Average Speed mph
South: Herold Ranch Road											
3L	L	532	2.0	0.446	15.1	LOS B	3.0	75.4	0.78	0.97	25.6
8T	T	5	2.0	0.439	8.2	LOS A	3.0	75.4	0.78	0.84	27.3
8R	R	326	2.0	0.428	7.9	LOS A	3.0	76.4	0.77	0.78	28.1
Approach		863	2.0	0.446	12.3	LOS B	3.0	76.4	0.78	0.90	26.4
East: Butler Avenue											
1L	L	368	2.0	0.757	16.8	LOS B	8.5	214.6	0.86	1.10	25.1
6T	T	832	2.0	0.757	10.0	LOS B	8.5	214.6	0.86	1.03	27.4
6R	R	5	2.0	0.752	11.4	LOS B	8.5	214.6	0.86	1.06	27.5
Approach		1205	2.0	0.757	12.1	LOS B	8.5	214.6	0.86	1.05	26.6
North: Site Access											
7L	L	5	2.0	0.051	15.8	LOS B	0.3	6.4	0.78	0.96	20.8
4T	T	5	2.0	0.051	8.9	LOS A	0.3	6.4	0.78	0.81	21.8
4R	R	5	2.0	0.051	10.0	LOS A	0.3	6.4	0.78	0.84	21.6
Approach		16	2.0	0.051	11.6	LOS B	0.3	6.4	0.78	0.87	21.4
West: Butler Avenue											
5L	L	5	2.0	0.585	13.5	LOS B	5.8	147.2	0.73	0.92	27.2
2T	T	1105	2.0	0.574	6.7	LOS A	5.8	147.2	0.73	0.68	28.6
2R	R	637	2.0	0.590	7.3	LOS A	6.2	158.7	0.73	0.71	28.2
Approach		1747	2.0	0.590	6.9	LOS B	6.2	158.7	0.73	0.69	28.5
All Vehicles		3832	2.0	0.757	9.8	LOS A	8.5	214.6	0.78	0.85	27.3

Level of Service (Aver. Int. Delay): LOS A. Based on average delay for all vehicle movements. LOS Method: Delay (HCM).
Level of Service (Worst Movement): LOS B. LOS Method for individual vehicle movements: Delay (HCM).
Approach LOS values are based on the worst delay for any vehicle movement.
Roundabout LOS Method: Same as Signalised Intersections.
Roundabout Capacity Model: SIDRA Standard.

Copyright © 2000-2010 Akcelik & Associates Pty Ltd
www.sidrasolutions.com

Movement	EBL	EBT	EBR	WBL	WBT	WBR	NBL	NBT	NBR	SBL	SBT	SBR
Lane Configurations												
Volume (veh/h)	760	465	10	10	260	90	10	10	10	195	10	745
Number	5	2	12	1	6	16	3	8	18	7	4	14
Initial Q (Qb), veh	0	0	0	0	0	0	0	0	0	0	0	0
Ped-Bike Adj(A_pbT)	1.00		1.00	1.00		1.00	1.00		1.00	1.00		1.00
Parking Bus Adj	1.00	1.00	1.00	1.00	1.00	1.00	1.00	1.00	1.00	1.00	1.00	1.00
Adj Sat Flow veh/h/ln	186.3	186.3	190.0	186.3	186.3	186.3	186.3	186.3	190.0	190.0	186.3	186.3
Lanes	1	1	0	1	1	1	1	1	0	0	1	1
Cap, veh/h	867	1184	26	242	348	296	126	198	198	370	15	1033
Arrive On Green	0.42	0.65	0.65	0.19	0.19	0.19	0.23	0.23	0.23	0.23	0.23	0.23
Sat Flow, veh/h	1774	1816	40	881	1863	1583	664	856	856	1275	66	1583
Grp Volume(v), veh/h	826	0	516	11	283	98	11	0	22	223	0	810
Grp Sat Flow(s),veh/h/ln	1774	0	1856	881	1863	1583	664	0	1712	1341	0	1583
Q Serve(g_s), s	35.1	0.0	12.4	1.0	13.5	5.0	1.4	0.0	0.9	13.7	0.0	21.4
Cycle Q Clear(g_c), s	35.1	0.0	12.4	1.0	13.5	5.0	16.0	0.0	0.9	14.6	0.0	21.4
Prop In Lane	1.00		0.02	1.00		1.00	1.00		0.50	0.95		1.00
Lane Grp Cap(c), veh/h	867	0	1209	242	348	296	126	0	395	385	0	1033
V/C Ratio(X)	0.95	0.00	0.43	0.05	0.81	0.33	0.09	0.00	0.06	0.58	0.00	0.78
Avail Cap(c_a), veh/h	960	0	1355	265	396	336	126	0	395	385	0	1033
HCM Platoon Ratio	1.00	1.00	1.00	1.00	1.00	1.00	1.00	1.00	1.00	1.00	1.00	1.00
Upstream Filter(I)	1.00	0.00	1.00	1.00	1.00	1.00	1.00	0.00	1.00	1.00	0.00	1.00
Uniform Delay (d), s/veh	18.1	0.0	7.8	31.1	36.2	32.7	40.5	0.0	27.8	33.5	0.0	11.5
Incr Delay (d2), s/veh	17.8	0.0	0.2	0.1	10.5	0.5	0.1	0.0	0.0	1.4	0.0	3.7
Initial Q Delay(d3),s/veh	0.0	0.0	0.0	0.0	0.0	0.0	0.0	0.0	0.0	0.0	0.0	0.0
%ile Back of Q (50%), veh/ln	23.3	0.0	5.2	0.2	7.4	2.0	0.2	0.0	0.4	5.0	0.0	12.6
Lane Grp Delay (d), s/veh	35.9	0.0	8.0	31.1	46.6	33.2	40.6	0.0	27.8	34.9	0.0	15.1
Lane Grp LOS	D		A	C	D	C	D		C	C		B
Approach Vol, veh/h		1342			392			33			1033	
Approach Delay, s/veh		25.2			42.8			32.1			19.4	
Approach LOS		C			D			C			B	

Timer												
Assigned Phs	5	2			6			8			4	
Phs Duration (G+Y+Rc), s	43.1	65.7			22.6			27.0			27.0	
Change Period (Y+Rc), s	4.0	5.3			5.3			5.6			5.6	
Max Green Setting (Gmax), s	44.0	67.7			19.7			21.4			21.4	
Max Q Clear Time (g_c+I1), s	37.1	14.4			15.5			18.0			23.4	
Green Ext Time (p_c), s	2.0	5.1			1.8			1.2			0.0	

Intersection Summary	
HCM 2010 Ctrl Delay	25.6
HCM 2010 LOS	C

Notes

User approved pedestrian interval to be less than phase max green.

Movement	EBL	EBT	EBR	WBL	WBT	WBR	NBL	NBT	NBR	SBL	SBT	SBR
Lane Configurations												
Volume (veh/h)	290	0	10	10	0	240	25	270	15	235	465	225
Number	7	4	14	3	8	18	5	2	12	1	6	16
Initial Q (Qb), veh	0	0	0	0	0	0	0	0	0	0	0	0
Ped-Bike Adj(A_pbT)	1.00		1.00	1.00		1.00	1.00		1.00	1.00		1.00
Parking Bus Adj	1.00	1.00	1.00	1.00	1.00	1.00	1.00	1.00	1.00	1.00	1.00	1.00
Adj Sat Flow veh/h/ln	186.3	186.3	190.0	186.3	186.3	190.0	186.3	186.3	190.0	186.3	186.3	186.3
Lanes	1	1	0	1	1	0	1	1	0	1	1	1
Cap, veh/h	427	0	457	496	0	311	299	812	44	491	864	734
Arrive On Green	0.15	0.00	0.29	0.06	0.00	0.20	0.46	0.46	0.46	0.46	0.46	0.46
Sat Flow, veh/h	1774	0	1583	1774	0	1583	709	1750	96	1066	1863	1583
Grp Volume(v), veh/h	315	0	11	11	0	261	27	0	309	255	505	245
Grp Sat Flow(s),veh/h/ln	1774	0	1583	1774	0	1583	709	0	1846	1066	1863	1583
Q Serve(g_s), s	7.3	0.0	0.3	0.3	0.0	10.2	1.9	0.0	7.0	13.1	12.9	6.3
Cycle Q Clear(g_c), s	7.3	0.0	0.3	0.3	0.0	10.2	14.8	0.0	7.0	20.1	12.9	6.3
Prop In Lane	1.00		1.00	1.00		1.00	1.00		0.05	1.00		1.00
Lane Grp Cap(c), veh/h	427	0	457	496	0	311	299	0	856	491	864	734
V/C Ratio(X)	0.74	0.00	0.02	0.02	0.00	0.84	0.09	0.00	0.36	0.52	0.58	0.33
Avail Cap(c_a), veh/h	648	0	457	826	0	392	508	0	1400	805	1413	1201
HCM Platoon Ratio	1.00	1.00	1.00	1.00	1.00	1.00	1.00	1.00	1.00	1.00	1.00	1.00
Upstream Filter(I)	1.00	0.00	1.00	1.00	0.00	1.00	1.00	0.00	1.00	1.00	1.00	1.00
Uniform Delay (d), s/veh	14.0	0.0	16.5	17.9	0.0	25.0	18.2	0.0	11.2	17.6	12.7	11.0
Incr Delay (d2), s/veh	2.5	0.0	0.0	0.0	0.0	12.2	0.1	0.0	0.3	0.9	0.6	0.3
Initial Q Delay(d3),s/veh	0.0	0.0	0.0	0.0	0.0	0.0	0.0	0.0	0.0	0.0	0.0	0.0
%ile Back of Q (50%), veh/ln	5.2	0.0	0.1	0.1	0.0	4.9	0.3	0.0	2.9	3.4	5.5	2.2
Lane Grp Delay (d), s/veh	16.5	0.0	16.5	17.9	0.0	37.2	18.3	0.0	11.4	18.5	13.4	11.3
Lane Grp LOS	B		B	B		D	B		B	B	B	B
Approach Vol, veh/h		326			272			336			1005	
Approach Delay, s/veh		16.5			36.4			12.0			14.2	
Approach LOS		B			D			B			B	

Timer												
Assigned Phs	7	4		3	8			2			6	
Phs Duration (G+Y+Rc), s	13.9	22.7		8.0	16.7			34.0			34.0	
Change Period (Y+Rc), s	4.0	4.0		4.0	4.0			4.0			4.0	
Max Green Setting (Gmax), s	18.0	18.0		16.0	16.0			49.0			49.0	
Max Q Clear Time (g_c+I1), s	9.3	2.3		2.3	12.2			16.8			22.1	
Green Ext Time (p_c), s	0.6	1.5		0.0	0.5			8.3			7.9	

Intersection Summary	
HCM 2010 Ctrl Delay	17.3
HCM 2010 LOS	B

Notes

Intersection	
Intersection Delay, s/veh	0

Movement	EBL	EBT	EBR	WBL	WBT	WBR	NBL	NBT	NBR	SBL	SBT	SBR
Vol, veh/h	0	15	0	0	5	0	0	0	0	0	0	0
Conflicting Peds, #/hr	0	0	0	0	0	0	0	0	0	0	0	0
Sign Control	Free	Free	Free	Free	Free	Free	Stop	Stop	Stop	Stop	Stop	Stop
RT Channelized	-	-	None	-	-	None	-	-	None	-	-	None
Storage Length	-	-	-	-	-	-	-	-	-	-	-	-
Veh in Median Storage, #	-	0	-	-	0	-	-	0	-	-	0	-
Grade, %	-	0	-	-	0	-	-	0	-	-	0	-
Peak Hour Factor	92	92	92	92	92	92	92	92	92	92	92	92
Heavy Vehicles, %	2	2	2	2	2	2	2	2	2	2	2	2
Mvmt Flow	0	16	0	0	5	0	0	0	0	0	0	0

Major/Minor	Major1			Major2			Minor1			Minor2		
Conflicting Flow All	5	0	0	16	0	0	21	21	16	21	21	5
Stage 1	-	-	-	-	-	-	16	16	-	5	5	-
Stage 2	-	-	-	-	-	-	5	5	-	16	16	-
Follow-up Headway	2.218	-	-	2.218	-	-	3.518	4.018	3.318	3.518	4.018	3.318
Pot Capacity-1 Maneuver	1616	-	-	1602	-	-	992	873	1063	992	873	1078
Stage 1	-	-	-	-	-	-	1004	882	-	1017	892	-
Stage 2	-	-	-	-	-	-	1017	892	-	1004	882	-
Time blocked-Platoon, %		-	-		-	-						
Mov Capacity-1 Maneuver	1616	-	-	1602	-	-	992	873	1063	992	873	1078
Mov Capacity-2 Maneuver	-	-	-	-	-	-	992	873	-	992	873	-
Stage 1	-	-	-	-	-	-	1004	882	-	1017	892	-
Stage 2	-	-	-	-	-	-	1017	892	-	1004	882	-

Approach	EB	WB	NB	SB
HCM Control Delay, s	0	0	0	0
HCM LOS			A	A

Minor Lane / Major Mvmt	NBLn1	EBL	EBT	EBR	WBL	WBT	WBR	SBLn1
Capacity (veh/h)	0	1616	-	-	1602	-	-	0
HCM Lane V/C Ratio	+	-	-	-	-	-	-	+
HCM Control Delay (s)	0	0	-	-	0	-	-	0
HCM Lane LOS	A	A			A			A
HCM 95th %tile Q(veh)	+	0	-	-	0	-	-	+

Notes

~ : Volume Exceeds Capacity; $: Delay Exceeds 300 Seconds; Error : Computation Not Defined

Movement	SEL	SET	NWT	NWR	SWL	SWR
Lane Configurations						
Volume (veh/h)	455	1080	1270	200	125	270
Number	1	6	2	12	3	18
Initial Q (Qb), veh	0	0	0	0	0	0
Ped-Bike Adj(A_pbT)	1.00			1.00	1.00	1.00
Parking Bus Adj	1.00	1.00	1.00	1.00	1.00	1.00
Adj Sat Flow veh/h/ln	186.3	186.3	186.3	190.0	186.3	186.3
Lanes	1	2	2	0	1	1
Cap, veh/h	566	2948	1534	238	247	220
Arrive On Green	0.27	0.79	0.49	0.49	0.14	0.14
Sat Flow, veh/h	1774	3725	3149	490	1774	1583
Grp Volume(v), veh/h	495	1174	810	787	136	293
Grp Sat Flow(s),veh/h/ln	1774	1863	1863	1776	1774	1583
Q Serve(g_s), s	24.6	11.0	45.4	47.0	8.2	16.0
Cycle Q Clear(g_c), s	24.6	11.0	45.4	47.0	8.2	16.0
Prop In Lane	1.00			0.28	1.00	1.00
Lane Grp Cap(c), veh/h	566	2948	907	865	247	220
V/C Ratio(X)	0.87	0.40	0.89	0.91	0.55	1.33
Avail Cap(c_a), veh/h	566	2948	907	865	247	220
HCM Platoon Ratio	1.00	1.00	1.00	1.00	1.00	1.00
Upstream Filter(I)	1.00	1.00	1.00	1.00	1.00	1.00
Uniform Delay (d), s/veh	32.7	3.7	26.8	27.2	46.2	49.5
Incr Delay (d2), s/veh	17.1	0.4	13.0	15.3	8.6	176.3
Initial Q Delay(d3),s/veh	0.0	0.0	0.0	0.0	0.0	0.0
%ile Back of Q (50%), veh/ln	9.7	4.1	23.7	24.0	4.3	17.3
Lane Grp Delay (d), s/veh	49.7	4.1	39.8	42.5	54.7	225.8
Lane Grp LOS	D	A	D	D	D	F
Approach Vol, veh/h		1669	1597		429	
Approach Delay, s/veh		17.6	41.1		171.6	
Approach LOS		B	D		F	

Timer			
Assigned Phs	1	6	2
Phs Duration (G+Y+Rc), s	35.0	95.0	60.0
Change Period (Y+Rc), s	4.0	4.0	4.0
Max Green Setting (Gmax), s	31.0	91.0	56.0
Max Q Clear Time (g_c+I1), s	26.6	13.0	49.0
Green Ext Time (p_c), s	0.7	51.0	6.6

Intersection Summary	
HCM 2010 Ctrl Delay	45.6
HCM 2010 LOS	D

Notes

Movement	EBL	EBT	EBR	WBL	WBT	WBR	NBL	NBT	NBR	SBL	SBT	SBR
Lane Configurations												
Volume (veh/h)	15	5	10	30	5	120	15	1145	35	195	1345	25
Number	7	4	14	3	8	18	5	2	12	1	6	16
Initial Q (Qb), veh	0	0	0	0	0	0	0	0	0	0	0	0
Ped-Bike Adj(A_pbT)	1.00		1.00	1.00		1.00	1.00		1.00	1.00		1.00
Parking Bus Adj	1.00	1.00	1.00	1.00	1.00	1.00	1.00	1.00	1.00	1.00	1.00	1.00
Adj Sat Flow veh/h/ln	190.0	186.3	190.0	186.3	186.3	190.0	186.3	186.3	190.0	186.3	186.3	186.3
Lanes	0	1	0	1	1	0	1	1	0	1	1	1
Cap, veh/h	89	33	40	143	8	213	73	1204	37	217	1474	1253
Arrive On Green	0.14	0.14	0.14	0.14	0.14	0.14	0.67	0.67	0.67	0.09	0.79	0.79
Sat Flow, veh/h	304	239	284	1392	59	1533	352	1798	55	1774	1863	1583
Grp Volume(v), veh/h	32	0	0	33	0	135	16	0	1283	212	1462	27
Grp Sat Flow(s),veh/h/ln	827	0	0	1392	0	1592	352	0	1853	1774	1863	1583
Q Serve(g_s), s	0.2	0.0	0.0	2.6	0.0	9.2	3.4	0.0	77.0	9.6	87.6	0.4
Cycle Q Clear(g_c), s	9.3	0.0	0.0	12.0	0.0	9.2	77.0	0.0	77.0	9.6	87.6	0.4
Prop In Lane	0.50		0.34	1.00		0.96	1.00		0.03	1.00		1.00
Lane Grp Cap(c), veh/h	162	0	0	143	0	222	73	0	1241	217	1474	1253
V/C Ratio(X)	0.20	0.00	0.00	0.23	0.00	0.61	0.22	0.00	1.03	0.98	0.99	0.02
Avail Cap(c_a), veh/h	162	0	0	143	0	222	73	0	1241	217	1474	1253
HCM Platoon Ratio	1.00	1.00	1.00	1.00	1.00	1.00	1.00	1.00	1.00	1.00	1.00	1.00
Upstream Filter(I)	1.00	0.00	0.00	1.00	0.00	1.00	1.00	0.00	1.00	1.00	1.00	1.00
Uniform Delay (d), s/veh	43.6	0.0	0.0	52.3	0.0	46.6	56.4	0.0	19.0	43.2	11.6	2.5
Incr Delay (d2), s/veh	2.7	0.0	0.0	3.7	0.0	11.9	6.8	0.0	34.8	55.6	21.6	0.0
Initial Q Delay(d3),s/veh	0.0	0.0	0.0	0.0	0.0	0.0	0.0	0.0	0.0	0.0	0.0	0.0
%ile Back of Q (50%), veh/ln	0.9	0.0	0.0	1.1	0.0	4.5	0.6	0.0	44.0	7.6	40.9	0.1
Lane Grp Delay (d), s/veh	46.3	0.0	0.0	56.0	0.0	58.4	63.1	0.0	53.8	98.8	33.2	2.6
Lane Grp LOS	D			E		E	E		F	F	C	A
Approach Vol, veh/h		32			168			1299			1701	
Approach Delay, s/veh		46.3			58.0			53.9			40.9	
Approach LOS		D			E			D			D	

Timer					
Assigned Phs		4		8		2		1	6	
Phs Duration (G+Y+Rc), s		20.0		20.0		81.0		14.0	95.0	
Change Period (Y+Rc), s		4.0		4.0		4.0		4.0	4.0	
Max Green Setting (Gmax), s		16.0		16.0		77.0		10.0	91.0	
Max Q Clear Time (g_c+I1), s		11.3		14.0		79.0		11.6	89.6	
Green Ext Time (p_c), s		0.4		0.2		0.0		0.0	1.4	

Intersection Summary		
HCM 2010 Ctrl Delay		47.1
HCM 2010 LOS		D

Notes

APPENDIX G 2030 BACKGROUND LEVEL OF SERVICE WORKSHEETS

Movement	SEL	SET	SER	NWL	NWT	NWR	NEL	NET	NER	SWL	SWT	SWR
Lane Configurations												
Volume (veh/h)	390	805	320	200	925	265	310	815	280	260	725	260
Number	7	4	14	3	8	18	5	2	12	1	6	16
Initial Q (Qb), veh	0	0	0	0	0	0	0	0	0	0	0	0
Ped-Bike Adj(A_pbT)	1.00		1.00	1.00		1.00	1.00		1.00	1.00		1.00
Parking Bus Adj	1.00	1.00	1.00	1.00	1.00	1.00	1.00	1.00	1.00	1.00	1.00	1.00
Adj Sat Flow veh/h/ln	186.3	186.3	186.3	186.3	186.3	186.3	186.3	186.3	186.3	186.3	186.3	186.3
Lanes	2	2	1	2	2	1	2	2	1	2	2	1
Cap, veh/h	468	1325	563	276	1117	475	402	989	421	347	930	395
Arrive On Green	0.14	0.36	0.36	0.08	0.30	0.30	0.12	0.27	0.27	0.10	0.25	0.25
Sat Flow, veh/h	3442	3725	1583	3442	3725	1583	3442	3725	1583	3442	3725	1583
Grp Volume(v), veh/h	424	875	348	217	1005	288	337	886	304	283	788	283
Grp Sat Flow(s),veh/h/ln	1721	1863	1583	1721	1863	1583	1721	1863	1583	1721	1863	1583
Q Serve(g_s), s	13.4	21.8	20.0	6.8	28.5	17.2	10.6	25.3	19.3	8.9	22.2	18.0
Cycle Q Clear(g_c), s	13.4	21.8	20.0	6.8	28.5	17.2	10.6	25.3	19.3	8.9	22.2	18.0
Prop In Lane	1.00		1.00	1.00		1.00	1.00		1.00	1.00		1.00
Lane Grp Cap(c), veh/h	468	1325	563	276	1117	475	402	989	421	347	930	395
V/C Ratio(X)	0.91	0.66	0.62	0.79	0.90	0.61	0.84	0.90	0.72	0.82	0.85	0.72
Avail Cap(c_a), veh/h	468	1325	563	312	1152	489	686	1017	432	593	930	395
HCM Platoon Ratio	1.00	1.00	1.00	1.00	1.00	1.00	1.00	1.00	1.00	1.00	1.00	1.00
Upstream Filter(I)	1.00	1.00	1.00	1.00	1.00	1.00	1.00	1.00	1.00	1.00	1.00	1.00
Uniform Delay (d), s/veh	47.0	29.9	29.3	49.8	37.0	33.0	47.7	39.0	36.8	48.6	39.4	37.8
Incr Delay (d2), s/veh	20.6	1.0	1.5	9.6	9.2	1.4	1.8	10.1	5.4	1.8	7.3	5.8
Initial Q Delay(d3),s/veh	0.0	0.0	0.0	0.0	0.0	0.0	0.0	0.0	0.0	0.0	0.0	0.0
%ile Back of Q (50%), veh/ln	7.3	10.4	8.2	3.4	15.0	7.0	4.8	13.4	8.3	4.1	11.4	7.8
Lane Grp Delay (d), s/veh	67.6	30.9	30.9	59.4	46.2	34.4	49.5	49.1	42.2	50.4	46.6	43.6
Lane Grp LOS	E	C	C	E	D	C	D	D	D	D	D	D
Approach Vol, veh/h		1647			1510			1527			1354	
Approach Delay, s/veh		40.3			45.8			47.8			46.8	
Approach LOS		D			D			D			D	

Timer												
Assigned Phs	7	4		3	8		5	2		1	6	
Phs Duration (G+Y+Rc), s	20.0	45.1		13.9	39.0		17.9	35.2		16.1	33.4	
Change Period (Y+Rc), s	5.0	5.9		5.0	5.9		5.0	5.9		5.0	5.9	
Max Green Setting (Gmax), s	15.0	39.1		10.0	34.1		22.0	30.1		19.0	27.1	
Max Q Clear Time (g_c+I1), s	15.4	23.8		8.8	30.5		12.6	27.3		10.9	24.2	
Green Ext Time (p_c), s	0.0	7.9		0.0	2.6		0.3	2.0		0.2	2.5	

Intersection Summary	
HCM 2010 Ctrl Delay	45.1
HCM 2010 LOS	D

Notes

Movement	SEL	SET	SER	NWL	NWT	NWR	NEL	NET	NER	SWL	SWT	SWR
Lane Configurations												
Volume (veh/h)	75	1155	455	140	1025	120	515	195	185	230	175	110
Number	7	4	14	3	8	18	5	2	12	1	6	16
Initial Q (Qb), veh	0	0	0	0	0	0	0	0	0	0	0	0
Ped-Bike Adj(A_pbT)	1.00		1.00	1.00		1.00	1.00		1.00	1.00		1.00
Parking Bus Adj	1.00	1.00	1.00	1.00	1.00	1.00	1.00	1.00	1.00	1.00	1.00	1.00
Adj Sat Flow veh/h/ln	186.3	186.3	186.3	186.3	186.3	190.0	186.3	186.3	186.3	186.3	186.3	186.3
Lanes	1	2	1	1	2	0	2	1	1	1	1	1
Cap, veh/h	207	1536	939	196	1369	160	623	386	328	394	278	236
Arrive On Green	0.05	0.41	0.41	0.05	0.42	0.42	0.18	0.21	0.21	0.12	0.15	0.15
Sat Flow, veh/h	1774	3725	1583	1774	3276	382	3442	1863	1583	1774	1863	1583
Grp Volume(v), veh/h	82	1255	495	152	633	611	560	212	201	250	190	120
Grp Sat Flow(s),veh/h/ln	1774	1863	1583	1774	1863	1795	1721	1863	1583	1774	1863	1583
Q Serve(g_s), s	2.6	29.1	18.0	4.8	29.2	29.3	15.5	9.9	11.2	11.6	9.4	6.8
Cycle Q Clear(g_c), s	2.6	29.1	18.0	4.8	29.2	29.3	15.5	9.9	11.2	11.6	9.4	6.8
Prop In Lane	1.00		1.00	1.00		0.21	1.00		1.00	1.00		1.00
Lane Grp Cap(c), veh/h	207	1536	939	196	778	750	623	386	328	394	278	236
V/C Ratio(X)	0.40	0.82	0.53	0.78	0.81	0.81	0.90	0.55	0.61	0.63	0.68	0.51
Avail Cap(c_a), veh/h	217	1536	939	196	778	750	635	625	531	394	510	434
HCM Platoon Ratio	1.00	1.00	1.00	1.00	1.00	1.00	1.00	1.00	1.00	1.00	1.00	1.00
Upstream Filter(I)	0.68	0.68	0.68	0.23	0.23	0.23	1.00	1.00	1.00	1.00	1.00	1.00
Uniform Delay (d), s/veh	20.2	25.4	11.7	22.4	25.0	25.0	39.0	34.6	35.1	30.2	39.3	38.2
Incr Delay (d2), s/veh	0.8	3.4	1.4	4.6	2.3	2.4	15.6	1.2	1.9	3.3	3.0	1.7
Initial Q Delay(d3),s/veh	0.0	0.0	0.0	0.0	0.0	0.0	0.0	0.0	0.0	0.0	0.0	0.0
%ile Back of Q (50%), veh/ln	1.1	14.0	6.8	4.0	13.7	13.2	8.1	4.8	4.7	5.5	4.7	2.8
Lane Grp Delay (d), s/veh	21.0	28.8	13.2	27.0	27.3	27.4	54.6	35.8	37.0	33.5	42.3	39.9
Lane Grp LOS	C	C	B	C	C	C	D	D	D	C	D	D
Approach Vol, veh/h		1832			1396			973			560	
Approach Delay, s/veh		24.2			27.3			46.9			37.8	
Approach LOS		C			C			D			D	

Timer												
Assigned Phs	7	4		3	8		5	2		1	6	
Phs Duration (G+Y+Rc), s	8.5	46.0		9.0	46.5		21.6	26.5		16.0	20.8	
Change Period (Y+Rc), s	4.0	5.8		4.0	5.8		4.0	6.3		4.0	6.3	
Max Green Setting (Gmax), s	5.0	40.2		5.0	40.2		18.0	32.7		12.0	26.7	
Max Q Clear Time (g_c+I1), s	4.6	31.1		6.8	31.3		17.5	13.2		13.6	11.4	
Green Ext Time (p_c), s	0.0	8.4		0.0	8.3		0.1	3.4		0.0	3.1	

Intersection Summary	
HCM 2010 Ctrl Delay	31.4
HCM 2010 LOS	C

Notes

User approved pedestrian interval to be less than phase max green.

Movement	EBL	EBT	EBR	WBL	WBT	WBR	NBL	NBT	NBR	SBL	SBT	SBR
Lane Configurations												
Volume (veh/h)	10	1110	565	270	895	5	360	15	270	15	10	5
Number	5	2	12	1	6	16	3	8	18	7	4	14
Initial Q (Qb), veh	0	0	0	0	0	0	0	0	0	0	0	0
Ped-Bike Adj(A_pbT)	1.00		1.00	1.00		1.00	1.00		1.00	1.00		1.00
Parking Bus Adj	1.00	1.00	1.00	1.00	1.00	1.00	1.00	1.00	1.00	1.00	1.00	1.00
Adj Sat Flow veh/h/ln	186.3	186.3	186.3	186.3	186.3	186.3	186.3	186.3	186.3	186.3	186.3	186.3
Lanes	1	2	1	1	2	1	2	1	1	1	1	1
Cap, veh/h	349	1674	921	323	2293	975	457	320	560	166	112	95
Arrive On Green	0.02	0.45	0.45	0.18	0.62	0.62	0.13	0.17	0.17	0.02	0.06	0.06
Sat Flow, veh/h	1774	3725	1583	1774	3725	1583	3442	1863	1583	1774	1863	1583
Grp Volume(v), veh/h	11	1207	614	293	973	5	391	16	293	16	11	5
Grp Sat Flow(s),veh/h/ln	1774	1863	1583	1774	1863	1583	1721	1863	1583	1774	1863	1583
Q Serve(g_s), s	0.4	29.5	29.6	18.1	15.2	0.1	12.4	0.8	16.4	0.9	0.6	0.3
Cycle Q Clear(g_c), s	0.4	29.5	29.6	18.1	15.2	0.1	12.4	0.8	16.4	0.9	0.6	0.3
Prop In Lane	1.00		1.00	1.00		1.00	1.00		1.00	1.00		1.00
Lane Grp Cap(c), veh/h	349	1674	921	323	2293	975	457	320	560	166	112	95
V/C Ratio(X)	0.03	0.72	0.67	0.91	0.42	0.01	0.86	0.05	0.52	0.10	0.10	0.05
Avail Cap(c_a), veh/h	433	1807	978	412	2440	1037	553	649	840	224	449	382
HCM Platoon Ratio	1.00	1.00	1.00	1.00	1.00	1.00	1.00	1.00	1.00	1.00	1.00	1.00
Upstream Filter(I)	1.00	1.00	1.00	1.00	1.00	1.00	1.00	1.00	1.00	1.00	1.00	1.00
Uniform Delay (d), s/veh	16.1	25.1	16.0	44.9	11.2	8.3	47.5	38.7	28.7	47.7	49.7	49.6
Incr Delay (d2), s/veh	0.0	1.3	1.6	18.0	0.1	0.0	10.3	0.0	0.6	0.1	0.1	0.1
Initial Q Delay(d3),s/veh	0.0	0.0	0.0	0.0	0.0	0.0	0.0	0.0	0.0	0.0	0.0	0.0
%ile Back of Q (50%), veh/ln	0.2	13.9	11.5	9.8	6.8	0.1	6.2	0.4	6.5	0.4	0.3	0.1
Lane Grp Delay (d), s/veh	16.1	26.4	17.6	62.8	11.3	8.3	57.7	38.8	29.2	47.8	49.9	49.7
Lane Grp LOS	B	C	B	E	B	A	E	D	C	D	D	D
Approach Vol, veh/h		1832			1271			700			32	
Approach Delay, s/veh		23.4			23.2			45.4			48.8	
Approach LOS		C			C			D			D	

Timer												
Assigned Phs	5	2		1	6		3	8		7	4	
Phs Duration (G+Y+Rc), s	5.7	56.4		24.4	75.0		18.9	24.8		6.4	12.3	
Change Period (Y+Rc), s	4.0	6.1		4.0	6.1		4.0	5.6		4.0	5.6	
Max Green Setting (Gmax), s	7.0	54.3		26.0	73.3		18.0	39.0		6.0	27.0	
Max Q Clear Time (g_c+I1), s	2.4	31.6		20.1	17.2		14.4	18.4		2.9	2.6	
Green Ext Time (p_c), s	0.0	18.6		0.2	36.7		0.4	0.8		0.0	0.8	

Intersection Summary	
HCM 2010 Ctrl Delay	27.6
HCM 2010 LOS	C

Notes

Movement	EBL	EBT	EBR	WBL	WBT	WBR	NBL	NBT	NBR	SBL	SBT	SBR
Lane Configurations												
Volume (veh/h)	5	1370	120	65	1020	5	145	5	125	5	0	5
Number	5	2	12	1	6	16	3	8	18	7	4	14
Initial Q (Qb), veh	0	0	0	0	0	0	0	0	0	0	0	0
Ped-Bike Adj(A_pbT)	1.00		1.00	1.00		1.00	1.00		1.00	1.00		1.00
Parking Bus Adj	1.00	1.00	1.00	1.00	1.00	1.00	1.00	1.00	1.00	1.00	1.00	1.00
Adj Sat Flow veh/h/ln	186.3	186.3	190.0	186.3	186.3	190.0	186.3	186.3	190.0	190.0	186.3	190.0
Lanes	1	2	0	1	2	0	1	1	0	0	1	0
Cap, veh/h	14	2049	178	237	2392	11	246	12	319	138	15	106
Arrive On Green	0.01	0.61	0.61	0.05	0.65	0.65	0.21	0.21	0.21	0.21	0.00	0.21
Sat Flow, veh/h	1774	3381	293	1774	3706	17	1405	56	1535	438	72	510
Grp Volume(v), veh/h	5	816	803	71	557	557	158	0	141	10	0	0
Grp Sat Flow(s),veh/h/ln	1774	1863	1811	1774	1863	1860	1405	0	1592	1019	0	0
Q Serve(g_s), s	0.3	35.2	36.0	1.4	17.4	17.4	12.7	0.0	8.8	0.0	0.0	0.0
Cycle Q Clear(g_c), s	0.3	35.2	36.0	1.4	17.4	17.4	21.5	0.0	8.8	8.9	0.0	0.0
Prop In Lane	1.00		0.16	1.00		0.01	1.00		0.96	0.50		0.50
Lane Grp Cap(c), veh/h	14	1129	1098	237	1202	1200	246	0	330	259	0	0
V/C Ratio(X)	0.37	0.72	0.73	0.30	0.46	0.46	0.64	0.00	0.43	0.04	0.00	0.00
Avail Cap(c_a), veh/h	93	1298	1262	262	1314	1312	284	0	374	297	0	0
HCM Platoon Ratio	1.00	1.00	1.00	1.00	1.00	1.00	1.00	1.00	1.00	1.00	1.00	1.00
Upstream Filter(I)	1.00	1.00	1.00	1.00	1.00	1.00	1.00	0.00	1.00	1.00	0.00	0.00
Uniform Delay (d), s/veh	56.7	15.8	16.0	15.2	10.3	10.3	48.9	0.0	39.6	36.5	0.0	0.0
Incr Delay (d2), s/veh	15.6	1.7	1.9	0.7	0.3	0.3	2.4	0.0	0.3	0.1	0.0	0.0
Initial Q Delay(d3),s/veh	0.0	0.0	0.0	0.0	0.0	0.0	0.0	0.0	0.0	0.0	0.0	0.0
%ile Back of Q (50%), veh/ln	0.2	16.2	16.2	1.0	7.5	7.5	4.7	0.0	3.6	0.2	0.0	0.0
Lane Grp Delay (d), s/veh	72.3	17.6	17.9	16.0	10.6	10.6	51.3	0.0	39.9	36.5	0.0	0.0
Lane Grp LOS	E	B	B	B	B	B	D		D	D		
Approach Vol, veh/h		1624			1185			299			10	
Approach Delay, s/veh		17.9			10.9			45.9			36.5	
Approach LOS		B			B			D			D	

Timer												
Assigned Phs	5	2		1	6			8			4	
Phs Duration (G+Y+Rc), s	4.9	75.6		9.4	80.1			29.8			29.8	
Change Period (Y+Rc), s	4.0	6.0		4.0	6.0			6.0			6.0	
Max Green Setting (Gmax), s	6.0	80.0		7.0	81.0			27.0			27.0	
Max Q Clear Time (g_c+I1), s	2.3	38.0		3.4	19.4			23.5			10.9	
Green Ext Time (p_c), s	0.0	31.6		0.0	41.4			0.3			0.7	

Intersection Summary	
HCM 2010 Ctrl Delay	18.0
HCM 2010 LOS	B

Notes

Movement	EBL	EBT	EBR	WBL	WBT	WBR	NEL	NET	NER	SWL	SWT	SWR
Lane Configurations												
Volume (veh/h)	95	485	225	440	285	65	275	515	670	130	360	5
Number	5	2	12	1	6	16	3	8	18	7	4	14
Initial Q (Qb), veh	0	0	0	0	0	0	0	0	0	0	0	0
Ped-Bike Adj(A_pbT)	1.00		1.00	1.00		1.00	1.00		1.00	1.00		1.00
Parking Bus Adj	1.00	1.00	1.00	1.00	1.00	1.00	1.00	1.00	1.00	1.00	1.00	1.00
Adj Sat Flow veh/h/ln	186.3	186.3	190.0	186.3	186.3	190.0	186.3	186.3	186.3	186.3	186.3	190.0
Lanes	1	2	0	2	2	0	1	2	2	1	2	0
Cap, veh/h	132	666	308	556	1069	241	332	1017	865	169	666	9
Arrive On Green	0.07	0.28	0.28	0.16	0.36	0.36	0.19	0.27	0.27	0.10	0.18	0.18
Sat Flow, veh/h	1774	2411	1117	3442	2944	664	1774	3725	3167	1774	3670	47
Grp Volume(v), veh/h	103	407	365	478	194	187	299	560	728	141	198	198
Grp Sat Flow(s),veh/h/ln	1774	1863	1666	1721	1863	1746	1774	1863	1583	1774	1863	1854
Q Serve(g_s), s	6.9	24.6	24.8	16.5	9.0	9.3	20.1	15.7	26.4	9.5	11.9	11.9
Cycle Q Clear(g_c), s	6.9	24.6	24.8	16.5	9.0	9.3	20.1	15.7	26.4	9.5	11.9	11.9
Prop In Lane	1.00		0.67	1.00		0.38	1.00		1.00	1.00		0.03
Lane Grp Cap(c), veh/h	132	514	460	556	677	634	332	1017	865	169	338	336
V/C Ratio(X)	0.78	0.79	0.79	0.86	0.29	0.29	0.90	0.55	0.84	0.83	0.59	0.59
Avail Cap(c_a), veh/h	233	662	592	763	831	778	510	1104	939	291	338	336
HCM Platoon Ratio	1.00	1.00	1.00	1.00	1.00	1.00	1.00	1.00	1.00	1.00	1.00	1.00
Upstream Filter(I)	1.00	1.00	1.00	1.00	1.00	1.00	1.00	1.00	1.00	1.00	1.00	1.00
Uniform Delay (d), s/veh	55.4	40.8	40.9	49.7	27.6	27.6	48.4	37.9	41.8	54.1	45.7	45.7
Incr Delay (d2), s/veh	9.5	5.0	5.7	7.4	0.2	0.3	13.3	0.5	6.6	10.1	2.6	2.7
Initial Q Delay(d3),s/veh	0.0	0.0	0.0	0.0	0.0	0.0	0.0	0.0	0.0	0.0	0.0	0.0
%ile Back of Q (50%), veh/ln	3.6	12.5	11.4	7.9	4.3	4.1	10.4	7.5	11.5	4.9	6.0	6.0
Lane Grp Delay (d), s/veh	64.9	45.8	46.6	57.1	27.8	27.9	61.7	38.4	48.3	64.2	48.3	48.3
Lane Grp LOS	E	D	D	E	C	C	E	D	D	E	D	D
Approach Vol, veh/h		875			859			1587			537	
Approach Delay, s/veh		48.4			44.1			47.3			52.5	
Approach LOS		D			D			D			D	

Timer												
Assigned Phs	5	2		1	6		3	8		7	4	
Phs Duration (G+Y+Rc), s	13.1	41.3		23.7	51.9		26.8	41.2		15.6	30.0	
Change Period (Y+Rc), s	4.0	7.7		4.0	7.7		4.0	7.9		4.0	7.9	
Max Green Setting (Gmax), s	16.0	43.3		27.0	54.3		35.0	36.1		20.0	21.1	
Max Q Clear Time (g_c+I1), s	8.9	26.8		18.5	11.3		22.1	28.4		11.5	13.9	
Green Ext Time (p_c), s	0.1	6.9		1.2	9.4		0.7	4.8		0.2	4.9	

Intersection Summary	
HCM 2010 Ctrl Delay	47.6
HCM 2010 LOS	D

Notes

Movement	EBL	EBT	EBR	WBL	WBT	WBR	NBL	NBT	NBR	SBL	SBT	SBR
Lane Configurations												
Volume (veh/h)	0	1145	360	320	1110	0	0	0	0	60	5	295
Number	5	2	12	1	6	16				7	4	14
Initial Q (Qb), veh	0	0	0	0	0	0				0	0	0
Ped-Bike Adj(A_pbT)	1.00		1.00	1.00		1.00				1.00		1.00
Parking Bus Adj	1.00	1.00	1.00	1.00	1.00	1.00				1.00	1.00	1.00
Adj Sat Flow veh/h/ln	0.0	186.3	186.3	186.3	186.3	0.0				186.3	186.3	186.3
Lanes	0	3	1	2	2	0				1	1	1
Cap, veh/h	0	1772	502	654	2189	0				418	439	373
Arrive On Green	0.00	0.32	0.00	0.19	0.59	0.00				0.24	0.24	0.24
Sat Flow, veh/h	0	5588	1583	3442	3725	0				1774	1863	1583
Grp Volume(v), veh/h	0	1245	0	348	1207	0				65	5	321
Grp Sat Flow(s),veh/h/ln	0	1863	1583	1721	1863	0				1774	1863	1583
Q Serve(g_s), s	0.0	11.2	0.0	5.2	11.3	0.0				1.7	0.1	11.1
Cycle Q Clear(g_c), s	0.0	11.2	0.0	5.2	11.3	0.0				1.7	0.1	11.1
Prop In Lane	0.00		1.00	1.00		0.00				1.00		1.00
Lane Grp Cap(c), veh/h	0	1772	502	654	2189	0				418	439	373
V/C Ratio(X)	0.00	0.70	0.00	0.53	0.55	0.00				0.16	0.01	0.86
Avail Cap(c_a), veh/h	0	3020	856	927	3316	0				900	945	803
HCM Platoon Ratio	1.00	1.00	1.00	1.00	1.00	1.00				1.00	1.00	1.00
Upstream Filter(I)	0.00	1.00	0.00	1.00	1.00	0.00				1.00	1.00	1.00
Uniform Delay (d), s/veh	0.0	17.2	0.0	20.9	7.2	0.0				17.3	16.7	20.9
Incr Delay (d2), s/veh	0.0	0.2	0.0	0.2	0.1	0.0				0.1	0.0	2.3
Initial Q Delay(d3),s/veh	0.0	0.0	0.0	0.0	0.0	0.0				0.0	0.0	0.0
%ile Back of Q (50%), veh/ln	0.0	4.9	0.0	2.1	4.2	0.0				0.7	0.1	4.3
Lane Grp Delay (d), s/veh	0.0	17.4	0.0	21.1	7.3	0.0				17.4	16.7	23.2
Lane Grp LOS		B		C	A					B	B	C
Approach Vol, veh/h		1245			1555						391	
Approach Delay, s/veh		17.4			10.4						22.2	
Approach LOS		B			B						C	

Timer			
Assigned Phs	2	1	6	4
Phs Duration (G+Y+Rc), s	22.7	15.5	38.2	19.0
Change Period (Y+Rc), s	4.6	4.6	4.6	5.5
Max Green Setting (Gmax), s	30.9	15.4	50.9	29.0
Max Q Clear Time (g_c+I1), s	13.2	7.2	13.3	13.1
Green Ext Time (p_c), s	4.9	3.7	6.0	0.4

Intersection Summary	
HCM 2010 Ctrl Delay	14.5
HCM 2010 LOS	B

Notes

Movement	EBL	EBT	EBR	WBL	WBT	WBR	NBL	NBT	NBR	SBL	SBT	SBR
Lane Configurations												
Volume (veh/h)	380	825	0	0	1090	85	340	0	725	0	0	0
Number	5	2	12	1	6	16	3	8	18			
Initial Q (Qb), veh	0	0	0	0	0	0	0	0	0			
Ped-Bike Adj(A_pbT)	1.00		1.00	1.00		1.00	1.00		1.00			
Parking Bus Adj	1.00	1.00	1.00	1.00	1.00	1.00	1.00	1.00	1.00			
Adj Sat Flow veh/h/ln	186.3	186.3	0.0	0.0	186.3	186.3	186.3	186.3	186.3			
Lanes	2	2	0	0	3	1	1	1	1			
Cap, veh/h	427	1617	0	0	1475	418	827	868	738			
Arrive On Green	0.12	0.43	0.00	0.00	0.26	0.00	0.47	0.00	0.47			
Sat Flow, veh/h	3442	3725	0	0	5588	1583	1774	1863	1583			
Grp Volume(v), veh/h	413	897	0	0	1185	0	370	0	788			
Grp Sat Flow(s),veh/h/ln	1721	1863	0	0	1863	1583	1774	1863	1583			
Q Serve(g_s), s	11.9	17.9	0.0	0.0	19.8	0.0	14.1	0.0	46.6			
Cycle Q Clear(g_c), s	11.9	17.9	0.0	0.0	19.8	0.0	14.1	0.0	46.6			
Prop In Lane	1.00		0.00	0.00		1.00	1.00		1.00			
Lane Grp Cap(c), veh/h	427	1617	0	0	1475	418	827	868	738			
V/C Ratio(X)	0.97	0.55	0.00	0.00	0.80	0.00	0.45	0.00	1.07			
Avail Cap(c_a), veh/h	427	1617	0	0	1475	418	827	868	738			
HCM Platoon Ratio	1.00	1.00	1.00	1.00	1.00	1.00	1.00	1.00	1.00			
Upstream Filter(I)	1.00	1.00	0.00	0.00	1.00	0.00	1.00	0.00	1.00			
Uniform Delay (d), s/veh	43.6	21.1	0.0	0.0	34.4	0.0	18.0	0.0	26.7			
Incr Delay (d2), s/veh	34.9	1.4	0.0	0.0	4.7	0.0	0.1	0.0	52.8			
Initial Q Delay(d3),s/veh	0.0	0.0	0.0	0.0	0.0	0.0	0.0	0.0	0.0			
%ile Back of Q (50%), veh/ln	7.3	8.4	0.0	0.0	10.0	0.0	6.1	0.0	28.9			
Lane Grp Delay (d), s/veh	78.5	22.5	0.0	0.0	39.1	0.0	18.2	0.0	79.5			
Lane Grp LOS	E	C			D		B		F			
Approach Vol, veh/h		1310			1185			1158				
Approach Delay, s/veh		40.2			39.1			59.9				
Approach LOS		D			D			E				

Timer												
Assigned Phs	5	2			6			8				
Phs Duration (G+Y+Rc), s	17.0	48.0			31.0			52.0				
Change Period (Y+Rc), s	4.6	4.6			4.6			5.4				
Max Green Setting (Gmax), s	12.4	43.4			26.4			46.6				
Max Q Clear Time (g_c+I1), s	13.9	19.9			21.8			48.6				
Green Ext Time (p_c), s	0.0	4.0			2.2			0.0				

Intersection Summary												
HCM 2010 Ctrl Delay			46.1									
HCM 2010 LOS			D									

Notes

Intersection	
Intersection Delay, s/veh	6.8

Movement	EBT	EBR	WBL	WBT	NBL	NBR
Vol, veh/h	1150	50	25	895	50	50
Conflicting Peds, #/hr	0	0	0	0	0	0
Sign Control	Free	Free	Free	Free	Stop	Stop
RT Channelized	-	None	-	None	-	None
Storage Length	-	-	200	-	-	-
Veh in Median Storage, #	0	-	-	0	0	-
Grade, %	0	-	-	0	0	-
Peak Hour Factor	92	92	92	92	92	92
Heavy Vehicles, %	2	2	2	2	2	2
Mvmt Flow	1250	54	27	973	54	54

Major/Minor	Major1		Major2		Minor1	
Conflicting Flow All	0	0	1304	0	1818	652
Stage 1	-	-	-	-	1277	-
Stage 2	-	-	-	-	541	-
Follow-up Headway	-	-	2.22	-	3.52	3.32
Pot Capacity-1 Maneuver	-	-	527	-	69	411
Stage 1	-	-	-	-	226	-
Stage 2	-	-	-	-	548	-
Time blocked-Platoon, %	-	-		-		
Mov Capacity-1 Maneuver	-	-	527	-	65	411
Mov Capacity-2 Maneuver	-	-	-	-	65	-
Stage 1	-	-	-	-	226	-
Stage 2	-	-	-	-	520	-

Approach	EB	WB	NB
HCM Control Delay, s	0	0.3	149.2
HCM LOS			F

Minor Lane / Major Mvmt	NBLn1	EBT	EBR	WBL	WBT
Capacity (veh/h)	112	-	-	527	-
HCM Lane V/C Ratio	0.97	-	-	0.052	-
HCM Control Delay (s)	149.2	-	-	12.202	-
HCM Lane LOS	F			B	
HCM 95th %tile Q(veh)	6.181	-	-	0.163	-

Notes
~ : Volume Exceeds Capacity; $: Delay Exceeds 300 Seconds; Error : Computation Not Defined

Movement	EBL	EBT	EBR	WBL	WBT	WBR	NBL	NBT	NBR	SBL	SBT	SBR
Lane Configurations												
Volume (veh/h)	580	415	185	95	195	90	125	245	60	225	235	530
Number	5	2	12	1	6	16	3	8	18	7	4	14
Initial Q (Qb), veh	0	0	0	0	0	0	0	0	0	0	0	0
Ped-Bike Adj(A_pbT)	1.00		1.00	1.00		1.00	1.00		1.00	1.00		1.00
Parking Bus Adj	1.00	1.00	1.00	1.00	1.00	1.00	1.00	1.00	1.00	1.00	1.00	1.00
Adj Sat Flow veh/h/ln	186.3	186.3	186.3	186.3	186.3	186.3	186.3	186.3	186.3	186.3	186.3	186.3
Lanes	1	2	1	1	2	1	1	1	1	1	1	1
Cap, veh/h	671	1359	578	316	599	254	329	473	402	416	547	890
Arrive On Green	0.27	0.36	0.36	0.06	0.16	0.16	0.07	0.25	0.25	0.11	0.29	0.29
Sat Flow, veh/h	1774	3725	1583	1774	3725	1583	1774	1863	1583	1774	1863	1583
Grp Volume(v), veh/h	630	451	201	103	212	98	136	266	65	245	255	576
Grp Sat Flow(s),veh/h/ln	1774	1863	1583	1774	1863	1583	1774	1863	1583	1774	1863	1583
Q Serve(g_s), s	21.7	8.2	8.6	4.5	4.7	5.2	5.2	11.6	3.0	8.6	10.5	23.4
Cycle Q Clear(g_c), s	21.7	8.2	8.6	4.5	4.7	5.2	5.2	11.6	3.0	8.6	10.5	23.4
Prop In Lane	1.00		1.00	1.00		1.00	1.00		1.00	1.00		1.00
Lane Grp Cap(c), veh/h	671	1359	578	316	599	254	329	473	402	416	547	890
V/C Ratio(X)	0.94	0.33	0.35	0.33	0.35	0.39	0.41	0.56	0.16	0.59	0.47	0.65
Avail Cap(c_a), veh/h	764	2023	860	316	1066	453	329	473	402	441	547	890
HCM Platoon Ratio	1.00	1.00	1.00	1.00	1.00	1.00	1.00	1.00	1.00	1.00	1.00	1.00
Upstream Filter(I)	1.00	1.00	1.00	1.00	1.00	1.00	1.00	1.00	1.00	1.00	1.00	1.00
Uniform Delay (d), s/veh	18.7	21.4	21.6	29.8	34.9	35.0	23.1	30.3	27.1	19.9	27.0	14.1
Incr Delay (d2), s/veh	18.1	0.1	0.3	0.4	0.3	0.7	0.8	4.8	0.9	1.9	2.8	3.6
Initial Q Delay(d3),s/veh	0.0	0.0	0.0	0.0	0.0	0.0	0.0	0.0	0.0	0.0	0.0	0.0
%ile Back of Q (50%), veh/ln	18.3	3.8	3.4	2.0	2.3	2.1	2.3	6.0	1.3	3.8	5.2	9.4
Lane Grp Delay (d), s/veh	36.8	21.5	21.8	30.2	35.1	35.8	23.9	35.1	27.9	21.7	29.8	17.7
Lane Grp LOS	D	C	C	C	D	D	C	D	C	C	C	B
Approach Vol, veh/h		1282			413			467			1076	
Approach Delay, s/veh		29.1			34.0			30.8			21.5	
Approach LOS		C			C			C			C	

Timer												
Assigned Phs	5	2		1	6		3	8		7	4	
Phs Duration (G+Y+Rc), s	29.1	39.4		10.0	20.3		11.0	29.3		14.7	33.0	
Change Period (Y+Rc), s	4.0	5.3		4.0	5.3		4.0	5.6		4.0	5.6	
Max Green Setting (Gmax), s	30.0	50.7		6.0	26.7		7.0	22.4		12.0	27.4	
Max Q Clear Time (g_c+I1), s	23.7	10.6		6.5	7.2		7.2	13.6		10.6	25.4	
Green Ext Time (p_c), s	1.3	4.9		0.0	4.4		0.0	2.5		0.1	0.9	

Intersection Summary	
HCM 2010 Ctrl Delay	27.4
HCM 2010 LOS	C

Notes

Movement	EBL	EBT	EBR	WBL	WBT	WBR	NBL	NBT	NBR	SBL	SBT	SBR
Lane Configurations												
Volume (veh/h)	10	5	15	20	5	130	15	1100	25	215	1060	25
Number	7	4	14	3	8	18	5	2	12	1	6	16
Initial Q (Qb), veh	0	0	0	0	0	0	0	0	0	0	0	0
Ped-Bike Adj(A_pbT)	1.00		1.00	1.00		1.00	1.00		1.00	1.00		1.00
Parking Bus Adj	1.00	1.00	1.00	1.00	1.00	1.00	1.00	1.00	1.00	1.00	1.00	1.00
Adj Sat Flow veh/h/ln	190.0	186.3	190.0	186.3	186.3	190.0	186.3	186.3	190.0	186.3	186.3	186.3
Lanes	0	1	0	1	1	0	1	2	0	1	2	1
Cap, veh/h	63	37	55	115	7	192	383	2425	55	401	2883	1225
Arrive On Green	0.12	0.12	0.12	0.12	0.12	0.12	0.67	0.67	0.67	0.06	0.77	0.77
Sat Flow, veh/h	148	295	442	1385	55	1537	474	3629	82	1774	3725	1583
Grp Volume(v), veh/h	32	0	0	22	0	146	16	614	609	234	1152	27
Grp Sat Flow(s),veh/h/ln	885	0	0	1385	0	1592	474	1863	1848	1774	1863	1583
Q Serve(g_s), s	0.1	0.0	0.0	1.7	0.0	9.6	1.3	17.7	17.7	4.2	11.0	0.4
Cycle Q Clear(g_c), s	9.7	0.0	0.0	11.4	0.0	9.6	1.3	17.7	17.7	4.2	11.0	0.4
Prop In Lane	0.34		0.50	1.00		0.97	1.00		0.04	1.00		1.00
Lane Grp Cap(c), veh/h	155	0	0	115	0	199	383	1245	1235	401	2883	1225
V/C Ratio(X)	0.21	0.00	0.00	0.19	0.00	0.74	0.04	0.49	0.49	0.58	0.40	0.02
Avail Cap(c_a), veh/h	175	0	0	134	0	220	383	1245	1235	476	2883	1225
HCM Platoon Ratio	1.00	1.00	1.00	1.00	1.00	1.00	1.00	1.00	1.00	1.00	1.00	1.00
Upstream Filter(I)	1.00	0.00	0.00	1.00	0.00	1.00	1.00	1.00	1.00	0.91	0.91	0.91
Uniform Delay (d), s/veh	42.5	0.0	0.0	51.3	0.0	45.8	6.2	8.9	8.9	7.7	4.0	2.8
Incr Delay (d2), s/veh	0.7	0.0	0.0	0.8	0.0	10.9	0.2	1.4	1.4	1.2	0.4	0.0
Initial Q Delay(d3),s/veh	0.0	0.0	0.0	0.0	0.0	0.0	0.0	0.0	0.0	0.0	0.0	0.0
%ile Back of Q (50%), veh/ln	0.8	0.0	0.0	0.6	0.0	4.5	0.2	8.0	7.9	1.8	4.3	0.1
Lane Grp Delay (d), s/veh	43.2	0.0	0.0	52.1	0.0	56.7	6.4	10.3	10.3	8.9	4.4	2.9
Lane Grp LOS	D			D		E	A	B	B	A	A	A
Approach Vol, veh/h		32			168			1239			1413	
Approach Delay, s/veh		43.2			56.1			10.3			5.1	
Approach LOS		D			E			B			A	

Timer					
Assigned Phs		4		8		2		1	6	
Phs Duration (G+Y+Rc), s		18.5		18.5		78.5		11.5	90.0	
Change Period (Y+Rc), s		5.0		5.0		6.0		5.0	6.0	
Max Green Setting (Gmax), s		15.0		15.0		68.0		11.0	84.0	
Max Q Clear Time (g_c+I1), s		11.7		13.4		19.7		6.2	13.0	
Green Ext Time (p_c), s		0.3		0.2		30.0		0.3	36.9	

Intersection Summary	
HCM 2010 Ctrl Delay	10.8
HCM 2010 LOS	B

Notes

Movement	SEL	SET	NWT	NWR	SWL	SWR
Lane Configurations						
Volume (veh/h)	475	1005	1275	200	115	280
Number	1	6	2	12	3	18
Initial Q (Qb), veh	0	0	0	0	0	0
Ped-Bike Adj(A_pbT)	1.00			1.00	1.00	1.00
Parking Bus Adj	1.00	1.00	1.00	1.00	1.00	1.00
Adj Sat Flow veh/h/ln	186.3	186.3	186.3	190.0	186.3	186.3
Lanes	1	2	2	0	1	1
Cap, veh/h	530	2811	1413	219	258	230
Arrive On Green	0.52	1.00	0.45	0.45	0.15	0.15
Sat Flow, veh/h	1774	3725	3152	488	1774	1583
Grp Volume(v), veh/h	516	1092	813	790	125	304
Grp Sat Flow(s),veh/h/ln	1774	1863	1863	1777	1774	1583
Q Serve(g_s), s	26.6	0.0	47.0	48.6	7.1	16.0
Cycle Q Clear(g_c), s	26.6	0.0	47.0	48.6	7.1	16.0
Prop In Lane	1.00			0.27	1.00	1.00
Lane Grp Cap(c), veh/h	530	2811	835	796	258	230
V/C Ratio(X)	0.97	0.39	0.97	0.99	0.48	1.32
Avail Cap(c_a), veh/h	535	2811	835	796	258	230
HCM Platoon Ratio	2.00	2.00	1.00	1.00	1.00	1.00
Upstream Filter(I)	0.48	0.48	0.86	0.86	1.00	1.00
Uniform Delay (d), s/veh	20.2	0.0	29.7	30.2	43.2	47.0
Incr Delay (d2), s/veh	20.7	0.2	23.1	27.9	1.4	171.1
Initial Q Delay(d3),s/veh	0.0	0.0	0.0	0.0	0.0	0.0
%ile Back of Q (50%), veh/ln	16.1	0.1	26.8	27.5	3.3	17.4
Lane Grp Delay (d), s/veh	40.9	0.2	52.8	58.0	44.6	218.1
Lane Grp LOS	D	A	D	E	D	F
Approach Vol, veh/h		1608	1603		429	
Approach Delay, s/veh		13.3	55.4		167.6	
Approach LOS		B	E		F	

Timer			
Assigned Phs	1	6	2
Phs Duration (G+Y+Rc), s	33.7	89.0	55.3
Change Period (Y+Rc), s	5.0	6.0	6.0
Max Green Setting (Gmax), s	29.0	83.0	49.0
Max Q Clear Time (g_c+I1), s	28.6	2.0	50.6
Green Ext Time (p_c), s	0.1	50.1	0.0

Intersection Summary	
HCM 2010 Ctrl Delay	50.0
HCM 2010 LOS	D

Notes

APPENDIX H 2030 TOTAL LEVEL OF SERVICE WORKSHEETS

Movement	SEL	SET	SER	NWL	NWT	NWR	NEL	NET	NER	SWL	SWT	SWR
Lane Configurations												
Volume (veh/h)	390	980	320	285	1070	240	310	815	305	310	725	260
Number	7	4	14	3	8	18	5	2	12	1	6	16
Initial Q (Qb), veh	0	0	0	0	0	0	0	0	0	0	0	0
Ped-Bike Adj(A_pbT)	1.00		1.00	1.00		1.00	1.00		1.00	1.00		1.00
Parking Bus Adj	1.00	1.00	1.00	1.00	1.00	1.00	1.00	1.00	1.00	1.00	1.00	1.00
Adj Sat Flow veh/h/ln	186.3	186.3	186.3	186.3	186.3	186.3	186.3	186.3	186.3	186.3	186.3	186.3
Lanes	2	2	1	2	2	1	2	2	1	2	2	1
Cap, veh/h	407	1262	536	371	1223	520	344	950	404	344	950	404
Arrive On Green	0.12	0.34	0.34	0.04	0.11	0.11	0.10	0.26	0.26	0.10	0.26	0.26
Sat Flow, veh/h	3442	3725	1583	3442	3725	1583	3442	3725	1583	3442	3725	1583
Grp Volume(v), veh/h	424	1065	348	310	1163	261	337	886	332	337	788	283
Grp Sat Flow(s),veh/h/ln	1721	1863	1583	1721	1863	1583	1721	1863	1583	1721	1863	1583
Q Serve(g_s), s	13.0	29.1	20.5	9.8	34.1	17.1	10.7	25.6	21.7	10.7	22.0	17.8
Cycle Q Clear(g_c), s	13.0	29.1	20.5	9.8	34.1	17.1	10.7	25.6	21.7	10.7	22.0	17.8
Prop In Lane	1.00		1.00	1.00		1.00	1.00		1.00	1.00		1.00
Lane Grp Cap(c), veh/h	407	1262	536	371	1223	520	344	950	404	344	950	404
V/C Ratio(X)	1.04	0.84	0.65	0.84	0.95	0.50	0.98	0.93	0.82	0.98	0.83	0.70
Avail Cap(c_a), veh/h	407	1262	536	376	1223	520	344	952	405	344	952	405
HCM Platoon Ratio	1.00	1.00	1.00	0.33	0.33	0.33	1.00	1.00	1.00	1.00	1.00	1.00
Upstream Filter(I)	1.00	1.00	1.00	0.20	0.20	0.20	0.65	0.65	0.65	1.00	1.00	1.00
Uniform Delay (d), s/veh	48.5	33.7	30.8	52.0	48.1	40.5	49.4	40.0	38.6	49.4	38.7	37.1
Incr Delay (d2), s/veh	55.9	5.1	2.2	3.2	4.3	0.1	33.3	12.1	11.6	42.5	8.3	9.7
Initial Q Delay(d3),s/veh	0.0	0.0	0.0	0.0	0.0	0.0	0.0	0.0	0.0	0.0	0.0	0.0
%ile Back of Q (50%), veh/ln	8.9	14.5	8.4	4.8	18.0	7.3	6.3	13.7	10.0	6.8	11.5	8.2
Lane Grp Delay (d), s/veh	104.4	38.8	33.0	55.2	52.4	40.6	82.7	52.1	50.2	91.8	47.0	46.9
Lane Grp LOS	F	D	C	E	D	D	F	D	D	F	D	D
Approach Vol, veh/h		1837			1734			1555			1408	
Approach Delay, s/veh		52.8			51.1			58.3			57.7	
Approach LOS		D			D			E			E	

Timer												
Assigned Phs	7	4		3	8		5	2		1	6	
Phs Duration (G+Y+Rc), s	18.0	43.1		16.9	42.0		16.0	33.9		16.0	33.9	
Change Period (Y+Rc), s	5.0	5.9		5.0	5.9		5.0	5.9		5.0	5.9	
Max Green Setting (Gmax), s	13.0	37.1		12.0	36.1		11.0	28.1		11.0	28.1	
Max Q Clear Time (g_c+I1), s	15.0	31.1		11.8	36.1		12.7	27.6		12.7	24.0	
Green Ext Time (p_c), s	0.0	4.6		0.0	0.0		0.0	0.5		0.0	3.4	

Intersection Summary	
HCM 2010 Ctrl Delay	54.7
HCM 2010 LOS	D

Notes

Movement	SEL	SET	SER	NWL	NWT	NWR	NEL	NET	NER	SWL	SWT	SWR
Lane Configurations												
Volume (veh/h)	75	1405	445	150	1235	170	515	195	200	295	175	110
Number	7	4	14	3	8	18	5	2	12	1	6	16
Initial Q (Qb), veh	0	0	0	0	0	0	0	0	0	0	0	0
Ped-Bike Adj(A_pbT)	1.00		1.00	1.00		1.00	1.00		1.00	1.00		1.00
Parking Bus Adj	1.00	1.00	1.00	1.00	1.00	1.00	1.00	1.00	1.00	1.00	1.00	1.00
Adj Sat Flow veh/h/ln	186.3	186.3	186.3	186.3	186.3	190.0	186.3	186.3	186.3	186.3	186.3	186.3
Lanes	1	2	1	1	2	0	2	1	1	1	1	1
Cap, veh/h	165	1636	933	171	1425	195	516	335	285	374	298	253
Arrive On Green	0.04	0.44	0.44	0.05	0.44	0.44	0.15	0.18	0.18	0.13	0.16	0.16
Sat Flow, veh/h	1774	3725	1583	1774	3209	439	3442	1863	1583	1774	1863	1583
Grp Volume(v), veh/h	82	1527	484	163	775	752	560	212	217	321	190	120
Grp Sat Flow(s),veh/h/ln	1774	1863	1583	1774	1863	1785	1721	1863	1583	1774	1863	1583
Q Serve(g_s), s	2.5	39.0	18.1	5.0	39.6	40.5	15.0	10.5	13.0	13.0	9.5	6.9
Cycle Q Clear(g_c), s	2.5	39.0	18.1	5.0	39.6	40.5	15.0	10.5	13.0	13.0	9.5	6.9
Prop In Lane	1.00		1.00	1.00		0.25	1.00		1.00	1.00		1.00
Lane Grp Cap(c), veh/h	165	1636	933	171	827	793	516	335	285	374	298	253
V/C Ratio(X)	0.50	0.93	0.52	0.95	0.94	0.95	1.08	0.63	0.76	0.86	0.64	0.47
Avail Cap(c_a), veh/h	174	1636	933	171	827	793	516	522	443	374	484	412
HCM Platoon Ratio	1.00	1.00	1.00	1.00	1.00	1.00	1.00	1.00	1.00	1.00	1.00	1.00
Upstream Filter(I)	0.42	0.42	0.42	0.09	0.09	0.09	1.00	1.00	1.00	1.00	1.00	1.00
Uniform Delay (d), s/veh	23.3	26.7	12.2	24.3	26.4	26.7	42.5	37.9	39.0	33.0	39.3	38.2
Incr Delay (d2), s/veh	1.0	5.5	0.9	11.4	2.6	3.3	64.5	2.0	4.2	17.8	2.3	1.4
Initial Q Delay(d3),s/veh	0.0	0.0	0.0	0.0	0.0	0.0	0.0	0.0	0.0	0.0	0.0	0.0
%ile Back of Q (50%), veh/ln	2.1	19.1	6.8	4.8	18.5	18.3	11.2	5.1	5.5	3.7	4.7	2.9
Lane Grp Delay (d), s/veh	24.3	32.2	13.0	35.7	29.1	30.0	107.0	39.9	43.2	50.8	41.6	39.5
Lane Grp LOS	C	C	B	D	C	C	F	D	D	D	D	D
Approach Vol, veh/h		2093			1690			989			631	
Approach Delay, s/veh		27.4			30.1			78.6			45.9	
Approach LOS		C			C			E			D	

Timer												
Assigned Phs	7	4		3	8		5	2		1	6	
Phs Duration (G+Y+Rc), s	8.5	49.7		9.0	50.2		19.0	24.3		17.0	22.3	
Change Period (Y+Rc), s	4.0	5.8		4.0	5.8		4.0	6.3		4.0	6.3	
Max Green Setting (Gmax), s	5.0	43.9		5.0	43.9		15.0	28.0		13.0	26.0	
Max Q Clear Time (g_c+I1), s	4.5	41.0		7.0	42.5		17.0	15.0		15.0	11.5	
Green Ext Time (p_c), s	0.0	2.9		0.0	1.4		0.0	3.0		0.0	3.1	

Intersection Summary	
HCM 2010 Ctrl Delay	39.8
HCM 2010 LOS	D

Notes

Movement	EBL	EBT	EBR	WBL	WBT	WBR	NBL	NBT	NBR	SBL	SBT	SBR
Lane Configurations												
Volume (veh/h)	10	1110	755	285	895	5	515	15	280	15	10	5
Number	5	2	12	1	6	16	3	8	18	7	4	14
Initial Q (Qb), veh	0	0	0	0	0	0	0	0	0	0	0	0
Ped-Bike Adj(A_pbT)	1.00		1.00	1.00		1.00	1.00		1.00	1.00		1.00
Parking Bus Adj	1.00	1.00	1.00	1.00	1.00	1.00	1.00	1.00	1.00	1.00	1.00	1.00
Adj Sat Flow veh/h/ln	186.3	186.3	186.3	186.3	186.3	186.3	186.3	186.3	186.3	186.3	186.3	186.3
Lanes	1	2	1	1	2	1	2	1	1	1	1	1
Cap, veh/h	341	1553	922	312	2149	913	569	339	567	153	71	60
Arrive On Green	0.02	0.42	0.42	0.18	0.58	0.58	0.17	0.18	0.18	0.02	0.04	0.04
Sat Flow, veh/h	1774	3725	1583	1774	3725	1583	3442	1863	1583	1774	1863	1583
Grp Volume(v), veh/h	11	1207	821	310	973	5	560	16	304	16	11	5
Grp Sat Flow(s),veh/h/ln	1774	1863	1583	1774	1863	1583	1721	1863	1583	1774	1863	1583
Q Serve(g_s), s	0.3	27.0	40.3	16.9	14.5	0.1	15.7	0.7	14.8	0.8	0.6	0.3
Cycle Q Clear(g_c), s	0.3	27.0	40.3	16.9	14.5	0.1	15.7	0.7	14.8	0.8	0.6	0.3
Prop In Lane	1.00		1.00	1.00		1.00	1.00		1.00	1.00		1.00
Lane Grp Cap(c), veh/h	341	1553	922	312	2149	913	569	339	567	153	71	60
V/C Ratio(X)	0.03	0.78	0.89	0.99	0.45	0.01	0.98	0.05	0.54	0.10	0.15	0.08
Avail Cap(c_a), veh/h	442	1553	922	312	2149	913	569	713	884	225	520	442
HCM Platoon Ratio	1.00	1.00	1.00	1.00	1.00	1.00	1.00	1.00	1.00	1.00	1.00	1.00
Upstream Filter(I)	1.00	1.00	1.00	0.53	0.53	0.53	0.74	0.74	0.74	1.00	1.00	1.00
Uniform Delay (d), s/veh	15.7	24.3	17.5	39.8	11.7	8.7	40.2	32.6	24.7	43.1	45.0	44.9
Incr Delay (d2), s/veh	0.0	3.9	12.6	35.4	0.4	0.0	28.2	0.0	0.4	0.1	0.4	0.2
Initial Q Delay(d3),s/veh	0.0	0.0	0.0	0.0	0.0	0.0	0.0	0.0	0.0	0.0	0.0	0.0
%ile Back of Q (50%), veh/ln	0.1	13.1	18.8	10.6	6.3	0.0	9.1	0.3	5.8	0.4	0.3	0.1
Lane Grp Delay (d), s/veh	15.7	28.2	30.2	75.2	12.1	8.7	68.5	32.7	25.1	43.2	45.4	45.1
Lane Grp LOS	B	C	C	E	B	A	E	C	C	D	D	D
Approach Vol, veh/h		2039			1288			880			32	
Approach Delay, s/veh		28.9			27.3			52.8			44.3	
Approach LOS		C			C			D			D	

Timer												
Assigned Phs	5	2		1	6		3	8		7	4	
Phs Duration (G+Y+Rc), s	5.5	46.4		21.0	61.9		20.0	23.2		6.1	9.3	
Change Period (Y+Rc), s	4.0	6.1		4.0	6.1		4.0	5.6		4.0	5.6	
Max Green Setting (Gmax), s	7.0	40.3		17.0	50.3		16.0	37.0		6.0	27.0	
Max Q Clear Time (g_c+I1), s	2.3	42.3		18.9	16.5		17.7	16.8		2.8	2.6	
Green Ext Time (p_c), s	0.0	0.0		0.0	27.0		0.0	0.8		0.0	0.9	

Intersection Summary	
HCM 2010 Ctrl Delay	33.5
HCM 2010 LOS	C

Notes

Movement	EBL	EBT	EBR	WBL	WBT	WBR	NBL	NBT	NBR	SBL	SBT	SBR
Lane Configurations												
Volume (veh/h)	5	1560	120	95	1175	5	145	5	165	5	0	5
Number	5	2	12	1	6	16	3	8	18	7	4	14
Initial Q (Qb), veh	0	0	0	0	0	0	0	0	0	0	0	0
Ped-Bike Adj(A_pbT)	1.00		1.00	1.00		1.00	1.00		1.00	1.00		1.00
Parking Bus Adj	1.00	1.00	1.00	1.00	1.00	1.00	1.00	1.00	1.00	1.00	1.00	1.00
Adj Sat Flow veh/h/ln	186.3	186.3	186.3	186.3	186.3	190.0	186.3	186.3	190.0	190.0	186.3	190.0
Lanes	1	2	1	1	2	0	1	1	0	0	1	0
Cap, veh/h	14	2216	942	219	2367	9	217	9	329	122	15	90
Arrive On Green	0.01	0.59	0.59	0.05	0.64	0.64	0.21	0.21	0.21	0.21	0.00	0.21
Sat Flow, veh/h	1774	3725	1583	1774	3708	15	1405	43	1547	351	71	422
Grp Volume(v), veh/h	5	1696	130	103	641	641	158	0	184	10	0	0
Grp Sat Flow(s),veh/h/ln	1774	1863	1583	1774	1863	1860	1405	0	1590	844	0	0
Q Serve(g_s), s	0.3	38.2	4.1	2.0	21.5	21.5	12.3	0.0	11.6	0.1	0.0	0.0
Cycle Q Clear(g_c), s	0.3	38.2	4.1	2.0	21.5	21.5	24.0	0.0	11.6	11.7	0.0	0.0
Prop In Lane	1.00		1.00	1.00		0.01	1.00		0.97	0.50		0.50
Lane Grp Cap(c), veh/h	14	2216	942	219	1189	1187	217	0	338	227	0	0
V/C Ratio(X)	0.37	0.77	0.14	0.47	0.54	0.54	0.73	0.00	0.54	0.04	0.00	0.00
Avail Cap(c_a), veh/h	94	2341	995	270	1220	1218	217	0	338	227	0	0
HCM Platoon Ratio	1.00	1.00	1.00	1.00	1.00	1.00	1.00	1.00	1.00	1.00	1.00	1.00
Upstream Filter(I)	1.00	1.00	1.00	0.13	0.13	0.13	1.00	0.00	1.00	1.00	0.00	0.00
Uniform Delay (d), s/veh	55.8	17.0	10.1	20.3	11.3	11.3	50.6	0.0	39.6	35.7	0.0	0.0
Incr Delay (d2), s/veh	15.5	2.6	0.3	0.2	0.2	0.2	10.4	0.0	1.0	0.1	0.0	0.0
Initial Q Delay(d3),s/veh	0.0	0.0	0.0	0.0	0.0	0.0	0.0	0.0	0.0	0.0	0.0	0.0
%ile Back of Q (50%), veh/ln	0.2	17.5	1.6	1.9	9.2	9.1	5.2	0.0	4.8	0.2	0.0	0.0
Lane Grp Delay (d), s/veh	71.3	19.6	10.4	20.5	11.5	11.5	61.0	0.0	40.7	35.7	0.0	0.0
Lane Grp LOS	E	B	B	C	B	B	E		D	D		
Approach Vol, veh/h		1831			1385			342			10	
Approach Delay, s/veh		19.1			12.2			50.0			35.7	
Approach LOS		B			B			D			D	

Timer												
Assigned Phs	5	2		1	6			8			4	
Phs Duration (G+Y+Rc), s	4.9	73.2		9.8	78.1			30.0			30.0	
Change Period (Y+Rc), s	4.0	6.0		4.0	6.0			6.0			6.0	
Max Green Setting (Gmax), s	6.0	71.0		9.0	74.0			24.0			24.0	
Max Q Clear Time (g_c+I1), s	2.3	40.2		4.0	23.5			26.0			13.7	
Green Ext Time (p_c), s	0.0	27.0		0.1	41.2			0.0			0.8	

Intersection Summary		
HCM 2010 Ctrl Delay		19.4
HCM 2010 LOS		B

Notes

HCM 2010 Signalized Intersection Summary
5: Butler Ave & Ponderosa Pkwy & Huntington Dr

6/26/2013

Movement	EBL	EBT	EBR	WBL	WBT	WBR	NEL	NET	NER	SWL	SWT	SWR
Lane Configurations												
Volume (veh/h)	95	685	225	630	455	85	275	515	895	155	360	5
Number	5	2	12	1	6	16	3	8	18	7	4	14
Initial Q (Qb), veh	0	0	0	0	0	0	0	0	0	0	0	0
Ped-Bike Adj(A_pbT)	1.00		1.00	1.00		1.00	1.00		1.00	1.00		1.00
Parking Bus Adj	1.00	1.00	1.00	1.00	1.00	1.00	1.00	1.00	1.00	1.00	1.00	1.00
Adj Sat Flow veh/h/ln	186.3	186.3	190.0	186.3	186.3	190.0	186.3	186.3	186.3	186.3	186.3	190.0
Lanes	1	2	0	2	2	0	1	2	2	1	2	0
Cap, veh/h	133	703	231	742	1231	228	328	776	1342	196	492	6
Arrive On Green	0.07	0.26	0.26	0.36	0.67	0.67	0.18	0.21	0.21	0.11	0.13	0.13
Sat Flow, veh/h	1774	2686	883	3442	3060	566	1774	3725	3167	1774	3670	47
Grp Volume(v), veh/h	103	517	473	685	300	287	299	560	973	168	198	198
Grp Sat Flow(s),veh/h/ln	1774	1863	1707	1721	1863	1763	1774	1863	1583	1774	1863	1854
Q Serve(g_s), s	6.6	30.3	30.3	22.1	8.4	8.5	19.1	16.2	24.1	10.8	11.9	12.0
Cycle Q Clear(g_c), s	6.6	30.3	30.3	22.1	8.4	8.5	19.1	16.2	24.1	10.8	11.9	12.0
Prop In Lane	1.00		0.52	1.00		0.32	1.00		1.00	1.00		0.03
Lane Grp Cap(c), veh/h	133	488	447	742	749	709	328	776	1342	196	250	248
V/C Ratio(X)	0.77	1.06	1.06	0.92	0.40	0.40	0.91	0.72	0.73	0.86	0.79	0.80
Avail Cap(c_a), veh/h	199	488	447	803	749	709	368	776	1342	230	250	248
HCM Platoon Ratio	1.00	1.00	1.00	1.67	1.67	1.67	1.00	1.00	1.00	1.00	1.00	1.00
Upstream Filter(I)	0.72	0.72	0.72	0.68	0.68	0.68	0.60	0.60	0.60	1.00	1.00	1.00
Uniform Delay (d), s/veh	52.6	42.7	42.7	36.1	12.7	12.7	46.3	42.7	27.7	50.6	48.6	48.6
Incr Delay (d2), s/veh	7.5	51.4	52.9	11.4	1.1	1.2	16.9	2.0	1.2	23.2	16.1	16.3
Initial Q Delay(d3),s/veh	0.0	0.0	0.0	0.0	0.0	0.0	0.0	0.0	0.0	0.0	0.0	0.0
%ile Back of Q (50%), veh/ln	3.3	21.5	19.8	10.0	3.4	3.2	10.3	8.0	11.8	6.2	6.9	6.9
Lane Grp Delay (d), s/veh	60.1	94.1	95.6	47.5	13.8	13.9	63.2	44.7	28.9	73.8	64.7	64.9
Lane Grp LOS	E	F	F	D	B	B	E	D	C	E	E	E
Approach Vol, veh/h		1093			1272			1832			564	
Approach Delay, s/veh		91.6			32.0			39.4			67.5	
Approach LOS		F			C			D			E	

Timer												
Assigned Phs	5	2		1	6		3	8		7	4	
Phs Duration (G+Y+Rc), s	12.7	38.0		29.0	54.3		25.4	32.0		16.8	23.4	
Change Period (Y+Rc), s	4.0	7.7		4.0	7.7		4.0	7.9		4.0	7.9	
Max Green Setting (Gmax), s	13.0	30.3		27.0	44.3		24.0	24.1		15.0	15.1	
Max Q Clear Time (g_c+I1), s	8.6	32.3		24.1	10.5		21.1	26.1		12.8	14.0	
Green Ext Time (p_c), s	0.1	0.0		0.9	13.7		0.3	0.0		0.1	1.0	

Intersection Summary	
HCM 2010 Ctrl Delay	52.7
HCM 2010 LOS	D

Notes

Movement	EBL	EBT	EBR	WBL	WBT	WBR	NBL	NBT	NBR	SBL	SBT	SBR
Lane Configurations												
Volume (veh/h)	0	1600	360	475	1490	0	0	0	0	125	5	295
Number	5	2	12	1	6	16				7	4	14
Initial Q (Qb), veh	0	0	0	0	0	0				0	0	0
Ped-Bike Adj(A_pbT)	1.00		1.00	1.00		1.00				1.00		1.00
Parking Bus Adj	1.00	1.00	1.00	1.00	1.00	1.00				1.00	1.00	1.00
Adj Sat Flow veh/h/ln	0.0	186.3	186.3	186.3	186.3	0.0				186.3	186.3	186.3
Lanes	0	3	1	2	2	0				1	1	1
Cap, veh/h	0	2187	620	762	2473	0				398	418	355
Arrive On Green	0.00	0.39	0.00	0.15	0.44	0.00				0.22	0.22	0.22
Sat Flow, veh/h	0	5588	1583	3442	3725	0				1774	1863	1583
Grp Volume(v), veh/h	0	1739	0	516	1620	0				136	5	321
Grp Sat Flow(s),veh/h/ln	0	1863	1583	1721	1863	0				1774	1863	1583
Q Serve(g_s), s	0.0	24.8	0.0	12.8	30.7	0.0				5.8	0.2	17.8
Cycle Q Clear(g_c), s	0.0	24.8	0.0	12.8	30.7	0.0				5.8	0.2	17.8
Prop In Lane	0.00		1.00	1.00		0.00				1.00		1.00
Lane Grp Cap(c), veh/h	0	2187	620	762	2473	0				398	418	355
V/C Ratio(X)	0.00	0.79	0.00	0.68	0.66	0.00				0.34	0.01	0.90
Avail Cap(c_a), veh/h	0	3186	903	893	3281	0				600	630	536
HCM Platoon Ratio	1.00	1.00	1.00	0.67	0.67	1.00				1.00	1.00	1.00
Upstream Filter(I)	0.00	0.25	0.00	0.46	0.46	0.00				1.00	1.00	1.00
Uniform Delay (d), s/veh	0.0	24.2	0.0	35.3	16.9	0.0				29.4	27.2	34.0
Incr Delay (d2), s/veh	0.0	0.8	0.0	0.5	0.6	0.0				0.2	0.0	10.2
Initial Q Delay(d3),s/veh	0.0	0.0	0.0	0.0	0.0	0.0				0.0	0.0	0.0
%ile Back of Q (50%), veh/ln	0.0	11.3	0.0	5.9	14.9	0.0				2.6	0.1	8.0
Lane Grp Delay (d), s/veh	0.0	25.0	0.0	35.9	17.6	0.0				29.6	27.2	44.2
Lane Grp LOS		C		D	B					C	C	D
Approach Vol, veh/h		1739			2136						462	
Approach Delay, s/veh		25.0			22.0						39.7	
Approach LOS		C			C						D	

Timer			
Assigned Phs	2	1	6	4
Phs Duration (G+Y+Rc), s	39.9	24.6	64.4	25.7
Change Period (Y+Rc), s	4.6	4.6	4.6	5.5
Max Green Setting (Gmax), s	51.4	23.4	79.4	30.5
Max Q Clear Time (g_c+I1), s	26.8	14.8	32.7	19.8
Green Ext Time (p_c), s	8.5	5.2	10.3	0.4

Intersection Summary	
HCM 2010 Ctrl Delay	25.1
HCM 2010 LOS	C

Notes

Movement	EBL	EBT	EBR	WBL	WBT	WBR	NBL	NBT	NBR	SBL	SBT	SBR
Lane Configurations												
Volume (veh/h)	380	1345	0	0	1625	135	340	0	915	0	0	0
Number	5	2	12	1	6	16	3	8	18			
Initial Q (Qb), veh	0	0	0	0	0	0	0	0	0			
Ped-Bike Adj(A_pbT)	1.00		1.00	1.00		1.00	1.00		1.00			
Parking Bus Adj	1.00	1.00	1.00	1.00	1.00	1.00	1.00	1.00	1.00			
Adj Sat Flow veh/h/ln	186.3	186.3	0.0	0.0	186.3	186.3	186.3	186.3	186.3			
Lanes	2	2	0	0	3	1	1	0	2			
Cap, veh/h	390	1928	0	0	2004	568	679	0	1213			
Arrive On Green	0.04	0.17	0.00	0.00	0.12	0.00	0.38	0.00	0.38			
Sat Flow, veh/h	3442	3725	0	0	5588	1583	1774	0	3167			
Grp Volume(v), veh/h	413	1462	0	0	1766	0	247	0	1127			
Grp Sat Flow(s),veh/h/ln	1721	1863	0	0	1863	1583	1774	0	1583			
Q Serve(g_s), s	11.4	37.6	0.0	0.0	31.3	0.0	10.0	0.0	34.3			
Cycle Q Clear(g_c), s	11.4	37.6	0.0	0.0	31.3	0.0	10.0	0.0	34.3			
Prop In Lane	1.00		0.00	0.00		1.00	1.00		1.00			
Lane Grp Cap(c), veh/h	390	1928	0	0	2004	568	679	0	1213			
V/C Ratio(X)	1.06	0.76	0.00	0.00	0.88	0.00	0.36	0.00	0.93			
Avail Cap(c_a), veh/h	390	1978	0	0	2077	589	998	0	1782			
HCM Platoon Ratio	0.33	0.33	1.00	1.00	0.33	0.33	1.00	1.00	1.00			
Upstream Filter(I)	0.70	0.70	0.00	0.00	0.58	0.00	1.00	0.00	1.00			
Uniform Delay (d), s/veh	48.4	35.7	0.0	0.0	42.2	0.0	22.2	0.0	29.7			
Incr Delay (d2), s/veh	54.8	2.0	0.0	0.0	3.6	0.0	0.1	0.0	5.4			
Initial Q Delay(d3),s/veh	0.0	0.0	0.0	0.0	0.0	0.0	0.0	0.0	0.0			
%ile Back of Q (50%), veh/ln	8.3	19.6	0.0	0.0	16.5	0.0	4.5	0.0	14.4			
Lane Grp Delay (d), s/veh	103.2	37.7	0.0	0.0	45.9	0.0	22.4	0.0	35.1			
Lane Grp LOS	F	D			D		C		D			
Approach Vol, veh/h		1875			1766			1374				
Approach Delay, s/veh		52.1			45.9			32.8				
Approach LOS		D			D			C				

Timer												
Assigned Phs	5	2			6			8				
Phs Duration (G+Y+Rc), s	16.0	56.7			40.7			43.9				
Change Period (Y+Rc), s	4.6	4.6			4.6			5.4				
Max Green Setting (Gmax), s	11.4	53.4			37.4			56.6				
Max Q Clear Time (g_c+I1), s	13.4	39.6			33.3			36.3				
Green Ext Time (p_c), s	0.0	6.1			2.8			2.2				

Intersection Summary		
HCM 2010 Ctrl Delay		44.6
HCM 2010 LOS		D

Notes

User approved volume balancing among the lanes for turning movement.

MOVEMENT SUMMARY

Site: Butler/Herold Ranch 2030 Project

Butler Avenue/Herold Ranch Road
Roundabout

Movement Performance - Vehicles

Mov ID	Turn	Demand Flow veh/h	HV %	Deg. Satn v/c	Average Delay sec	Level of Service	95% Back of Queue Vehicles veh	95% Back of Queue Distance ft	Prop. Queued	Effective Stop Rate per veh	Average Speed mph
South: Herold Ranch Road											
3L	L	758	2.0	0.665	17.6	LOS B	6.0	151.3	0.88	1.08	24.5
8T	T	53	2.0	0.666	9.9	LOS A	6.0	151.3	0.89	1.03	26.6
8R	R	353	2.0	0.492	8.9	LOS A	3.8	97.0	0.83	0.89	27.9
Approach		1163	2.0	0.665	14.6	LOS B	6.0	151.3	0.87	1.02	25.5
East: Butler Avenue											
1L	L	311	2.0	1.078	66.7	LOS E	30.9	784.9	1.00	2.20	13.4
6T	T	942	2.0	1.078	59.5	LOS E	31.8	806.8	1.00	2.21	13.5
6R	R	37	2.0	1.084	60.6	LOS E	31.8	806.8	1.00	2.22	13.5
Approach		1289	2.0	1.078	61.2	LOS E	31.8	806.8	1.00	2.21	13.4
North: Site Access											
7L	L	47	2.0	0.764	32.3	LOS C	5.6	143.0	0.94	1.26	16.8
4T	T	42	2.0	0.766	25.3	LOS C	5.6	143.0	0.94	1.22	17.1
4R	R	116	2.0	0.762	26.4	LOS C	5.6	143.0	0.94	1.23	17.0
Approach		205	2.0	0.760	27.5	LOS C	5.6	143.0	0.94	1.23	17.0
West: Butler Avenue											
5L	L	95	2.0	0.662	14.9	LOS B	7.7	196.0	0.79	0.96	26.4
2T	T	1105	2.0	0.661	8.1	LOS A	7.7	196.0	0.79	0.83	28.3
2R	R	1011	2.0	0.905	14.2	LOS B	21.3	540.4	1.00	1.07	25.4
Approach		2211	2.0	0.905	11.2	LOS B	21.3	540.4	0.89	0.95	26.8
All Vehicles		4868	2.0	1.078	26.0	LOS C	31.8	806.8	0.92	1.31	20.6

Level of Service (Aver. Int. Delay): LOS C. Based on average delay for all vehicle movements. LOS Method: Delay (HCM).
Level of Service (Worst Movement): LOS E. LOS Method for individual vehicle movements: Delay (HCM).
Approach LOS values are based on the worst delay for any vehicle movement.
Roundabout LOS Method: Same as Signalised Intersections.
Roundabout Capacity Model: SIDRA Standard.

Copyright © 2000-2010 Akcelik & Associates Pty Ltd
www.sidrasolutions.com

Movement	EBL	EBT	EBR	WBL	WBT	WBR	NBL	NBT	NBR	SBL	SBT	SBR
Lane Configurations												
Volume (veh/h)	770	455	185	110	245	90	125	370	70	225	385	755
Number	5	2	12	1	6	16	3	8	18	7	4	14
Initial Q (Qb), veh	0	0	0	0	0	0	0	0	0	0	0	0
Ped-Bike Adj(A_pbT)	1.00		1.00	1.00		1.00	1.00		1.00	1.00		1.00
Parking Bus Adj	1.00	1.00	1.00	1.00	1.00	1.00	1.00	1.00	1.00	1.00	1.00	1.00
Adj Sat Flow veh/h/ln	186.3	186.3	186.3	186.3	186.3	186.3	186.3	186.3	186.3	186.3	186.3	186.3
Lanes	1	2	1	1	2	1	1	1	1	1	1	1
Cap, veh/h	737	1519	646	299	543	231	178	454	386	257	544	985
Arrive On Green	0.33	0.41	0.41	0.07	0.15	0.15	0.04	0.24	0.24	0.09	0.29	0.29
Sat Flow, veh/h	1774	3725	1583	1774	3725	1583	1774	1863	1583	1774	1863	1583
Grp Volume(v), veh/h	837	495	201	120	266	98	136	402	76	245	418	821
Grp Sat Flow(s),veh/h/ln	1774	1863	1583	1774	1863	1583	1774	1863	1583	1774	1863	1583
Q Serve(g_s), s	34.0	9.3	8.9	5.9	6.8	5.8	4.0	21.4	3.9	9.0	21.1	30.1
Cycle Q Clear(g_c), s	34.0	9.3	8.9	5.9	6.8	5.8	4.0	21.4	3.9	9.0	21.1	30.1
Prop In Lane	1.00		1.00	1.00		1.00	1.00		1.00	1.00		1.00
Lane Grp Cap(c), veh/h	737	1519	646	299	543	231	178	454	386	257	544	985
V/C Ratio(X)	1.14	0.33	0.31	0.40	0.49	0.43	0.76	0.89	0.20	0.95	0.77	0.83
Avail Cap(c_a), veh/h	737	1772	753	299	796	338	178	454	386	257	544	985
HCM Platoon Ratio	1.00	1.00	1.00	1.00	1.00	1.00	1.00	1.00	1.00	1.00	1.00	1.00
Upstream Filter(I)	0.34	0.34	0.34	1.00	1.00	1.00	1.00	1.00	1.00	1.00	1.00	1.00
Uniform Delay (d), s/veh	25.4	20.8	20.7	34.2	40.5	40.1	36.5	37.6	30.9	28.1	33.3	15.3
Incr Delay (d2), s/veh	67.7	0.0	0.1	0.6	0.5	0.9	17.7	18.0	0.1	42.9	10.0	8.2
Initial Q Delay(d3),s/veh	0.0	0.0	0.0	0.0	0.0	0.0	0.0	0.0	0.0	0.0	0.0	0.0
%ile Back of Q (50%), veh/ln	33.3	4.3	3.4	2.7	3.3	2.4	0.9	12.3	1.6	9.9	11.4	17.3
Lane Grp Delay (d), s/veh	93.2	20.9	20.8	34.8	41.0	41.0	54.2	55.5	31.0	71.0	43.2	23.5
Lane Grp LOS	F	C	C	C	D	D	D	E	C	E	D	C
Approach Vol, veh/h		1533			484			614			1484	
Approach Delay, s/veh		60.3			39.5			52.2			36.9	
Approach LOS		E			D			D			D	

Timer												
Assigned Phs	5	2		1	6		3	8		7	4	
Phs Duration (G+Y+Rc), s	38.0	47.3		11.0	20.3		9.0	30.7		14.0	35.7	
Change Period (Y+Rc), s	4.0	5.3		4.0	5.3		5.0	5.6		5.0	5.6	
Max Green Setting (Gmax), s	34.0	49.0		7.0	22.0		4.0	25.1		9.0	30.1	
Max Q Clear Time (g_c+I1), s	36.0	11.3		7.9	8.8		6.0	23.4		11.0	32.1	
Green Ext Time (p_c), s	0.0	5.7		0.0	4.3		0.0	1.1		0.0	0.0	

Intersection Summary	
HCM 2010 Ctrl Delay	48.2
HCM 2010 LOS	D

Notes

Movement	EBL	EBT	EBR	WBL	WBT	WBR	NBL	NBT	NBR	SBL	SBT	SBR
Lane Configurations												
Volume (veh/h)	235	0	60	50	0	200	80	670	70	195	905	195
Number	7	4	14	3	8	18	5	2	12	1	6	16
Initial Q (Qb), veh	0	0	0	0	0	0	0	0	0	0	0	0
Ped-Bike Adj(A_pbT)	1.00		1.00	1.00		1.00	1.00		1.00	1.00		1.00
Parking Bus Adj	1.00	1.00	1.00	1.00	1.00	1.00	1.00	1.00	1.00	1.00	1.00	1.00
Adj Sat Flow veh/h/ln	186.3	186.3	190.0	186.3	186.3	190.0	186.3	186.3	190.0	186.3	186.3	186.3
Lanes	1	1	0	1	1	0	1	1	0	1	1	1
Cap, veh/h	284	0	346	320	0	216	160	886	92	541	1056	898
Arrive On Green	0.13	0.00	0.22	0.04	0.00	0.14	0.07	1.00	1.00	0.07	0.57	0.57
Sat Flow, veh/h	1774	0	1583	1774	0	1583	1774	1659	173	1774	1863	1583
Grp Volume(v), veh/h	255	0	65	54	0	217	87	0	804	212	984	212
Grp Sat Flow(s),veh/h/ln	1774	0	1583	1774	0	1583	1774	0	1832	1774	1863	1583
Q Serve(g_s), s	12.6	0.0	3.9	3.0	0.0	16.0	2.6	0.0	0.0	5.6	56.7	7.8
Cycle Q Clear(g_c), s	12.6	0.0	3.9	3.0	0.0	16.0	2.6	0.0	0.0	5.6	56.7	7.8
Prop In Lane	1.00		1.00	1.00		1.00	1.00		0.09	1.00		1.00
Lane Grp Cap(c), veh/h	284	0	346	320	0	216	160	0	978	541	1056	898
V/C Ratio(X)	0.90	0.00	0.19	0.17	0.00	1.00	0.54	0.00	0.82	0.39	0.93	0.24
Avail Cap(c_a), veh/h	304	0	346	486	0	216	160	0	978	634	1082	920
HCM Platoon Ratio	1.00	1.00	1.00	1.00	1.00	1.00	2.00	2.00	2.00	1.00	1.00	1.00
Upstream Filter(I)	1.00	0.00	1.00	1.00	0.00	1.00	0.82	0.00	0.82	1.00	1.00	1.00
Uniform Delay (d), s/veh	31.1	0.0	37.2	40.6	0.0	50.5	25.1	0.0	0.0	8.3	23.2	12.7
Incr Delay (d2), s/veh	26.5	0.0	0.3	0.2	0.0	61.8	3.0	0.0	6.5	0.5	15.5	0.6
Initial Q Delay(d3),s/veh	0.0	0.0	0.0	0.0	0.0	0.0	0.0	0.0	0.0	0.0	0.0	0.0
%ile Back of Q (50%), veh/ln	9.8	0.0	1.6	1.4	0.0	10.3	2.7	0.0	1.8	2.3	30.0	3.1
Lane Grp Delay (d), s/veh	57.7	0.0	37.5	40.8	0.0	112.3	28.1	0.0	6.5	8.8	38.7	13.3
Lane Grp LOS	E		D	D		F	C		A	A	D	B
Approach Vol, veh/h		320			271			891			1408	
Approach Delay, s/veh		53.6			98.0			8.6			30.4	
Approach LOS		D			F			A			C	

Timer												
Assigned Phs	7	4		3	8		5	2		1	6	
Phs Duration (G+Y+Rc), s	18.7	29.6		9.1	20.0		8.0	66.5		11.9	70.4	
Change Period (Y+Rc), s	4.0	4.0		4.0	4.0		4.0	4.0		4.0	4.0	
Max Green Setting (Gmax), s	16.0	16.0		16.0	16.0		4.0	58.0		14.0	68.0	
Max Q Clear Time (g_c+I1), s	14.6	5.9		5.0	18.0		4.6	2.0		7.6	58.7	
Green Ext Time (p_c), s	0.1	1.2		0.1	0.0		0.0	26.8		0.3	7.6	

Intersection Summary	
HCM 2010 Ctrl Delay	32.6
HCM 2010 LOS	C

Notes

Intersection	
Intersection Delay, s/veh	3

Movement	EBL	EBT	EBR	WBL	WBT	WBR	NBL	NBT	NBR	SBL	SBT	SBR
Vol, veh/h	15	25	0	0	15	0	0	0	0	0	0	10
Conflicting Peds, #/hr	0	0	0	0	0	0	0	0	0	0	0	0
Sign Control	Free	Free	Free	Free	Free	Free	Stop	Stop	Stop	Stop	Stop	Stop
RT Channelized	-	-	None	-	-	None	-	-	None	-	-	None
Storage Length	-	-	-	-	-	-	-	-	-	-	-	-
Veh in Median Storage, #	-	0	-	-	0	-	-	0	-	-	0	-
Grade, %	-	0	-	-	0	-	-	0	-	-	0	-
Peak Hour Factor	92	92	92	92	92	92	92	92	92	92	92	92
Heavy Vehicles, %	2	2	2	2	2	2	2	2	2	2	2	2
Mvmt Flow	16	27	0	0	16	0	0	0	0	0	0	11

Major/Minor	Major1			Major2			Minor1			Minor2		
Conflicting Flow All	16	0	0	27	0	0	82	76	27	76	76	16
Stage 1	-	-	-	-	-	-	60	60	-	16	16	-
Stage 2	-	-	-	-	-	-	22	16	-	60	60	-
Follow-up Headway	2.218	-	-	2.218	-	-	3.518	4.018	3.318	3.518	4.018	3.318
Pot Capacity-1 Maneuver	1602	-	-	1587	-	-	905	814	1048	914	814	1063
Stage 1	-	-	-	-	-	-	951	845	-	1004	882	-
Stage 2	-	-	-	-	-	-	996	882	-	951	845	-
Time blocked-Platoon, %		-	-		-	-						
Mov Capacity-1 Maneuver	1602	-	-	1587	-	-	889	806	1048	907	806	1063
Mov Capacity-2 Maneuver	-	-	-	-	-	-	889	806	-	907	806	-
Stage 1	-	-	-	-	-	-	941	837	-	994	882	-
Stage 2	-	-	-	-	-	-	986	882	-	941	837	-

Approach	EB	WB	NB	SB
HCM Control Delay, s	2.7	0	0	8.4
HCM LOS			A	A

Minor Lane / Major Mvmt	NBLn1	EBL	EBT	EBR	WBL	WBT	WBR	SBLn1
Capacity (veh/h)	0	1602	-	-	1587	-	-	1063
HCM Lane V/C Ratio	+	0.01	-	-	-	-	-	0.01
HCM Control Delay (s)	0	7.27	0	-	0	-	-	8.4
HCM Lane LOS	A	A	A		A			A
HCM 95th %tile Q(veh)	+	0.031	-	-	0	-	-	0.031

Notes
~ : Volume Exceeds Capacity; $: Delay Exceeds 300 Seconds; Error : Computation Not Defined

Intersection	
Intersection Delay, s/veh	1.3

Movement	EBL	EBT	WBT	WBR	SBL	SBR
Vol, veh/h	0	70	75	55	30	0
Conflicting Peds, #/hr	0	0	0	0	0	0
Sign Control	Free	Free	Free	Free	Stop	Stop
RT Channelized	-	None	-	None	-	None
Storage Length	200	-	-	-	0	-
Veh in Median Storage, #	-	0	0	-	0	-
Grade, %	-	0	0	-	0	-
Peak Hour Factor	92	92	92	92	92	92
Heavy Vehicles, %	2	2	2	2	2	2
Mvmt Flow	0	76	82	60	33	0

Major/Minor	Major1		Major2		Minor2	
Conflicting Flow All	141	0	-	0	187	111
Stage 1	-	-	-	-	111	-
Stage 2	-	-	-	-	76	-
Follow-up Headway	2.218	-	-	-	3.518	3.318
Pot Capacity-1 Maneuver	1442	-	-	-	802	942
Stage 1	-	-	-	-	914	-
Stage 2	-	-	-	-	947	-
Time blocked-Platoon, %		-	-	-		
Mov Capacity-1 Maneuver	1442	-	-	-	802	942
Mov Capacity-2 Maneuver	-	-	-	-	802	-
Stage 1	-	-	-	-	914	-
Stage 2	-	-	-	-	947	-

Approach	EB	WB	SB
HCM Control Delay, s	0	0	9.7
HCM LOS			A

Minor Lane / Major Mvmt	EBL	EBT	WBT	WBR	SBLn1
Capacity (veh/h)	1442	-	-	-	802
HCM Lane V/C Ratio	-	-	-	-	0.041
HCM Control Delay (s)	0	-	-	-	9.7
HCM Lane LOS	A				A
HCM 95th %tile Q(veh)	0	-	-	-	0.127

Notes

~ : Volume Exceeds Capacity; $: Delay Exceeds 300 Seconds; Error : Computation Not Defined

Intersection	
Intersection Delay, s/veh	2.2

Movement	EBL	EBT	EBR	WBL	WBT	WBR	NBL	NBT	NBR	SBL	SBT	SBR
Vol, veh/h	0	95	0	55	130	25	0	0	25	10	0	0
Conflicting Peds, #/hr	0	0	0	0	0	0	0	0	0	0	0	0
Sign Control	Free	Free	Free	Free	Free	Free	Stop	Stop	Stop	Stop	Stop	Stop
RT Channelized	-	-	None	-	-	None	-	-	None	-	-	None
Storage Length	200	-	-	200	-	-	-	-	-	-	-	-
Veh in Median Storage, #	-	0	-	-	0	-	-	0	-	-	0	-
Grade, %	-	0	-	-	0	-	-	0	-	-	0	-
Peak Hour Factor	92	92	92	92	92	92	92	92	92	92	92	92
Heavy Vehicles, %	2	2	2	2	2	2	2	2	2	2	2	2
Mvmt Flow	0	103	0	60	141	27	0	0	27	11	0	0

Major/Minor	Major1			Major2			Minor1			Minor2		
Conflicting Flow All	168	0	0	103	0	0	377	391	103	391	377	155
Stage 1	-	-	-	-	-	-	103	103	-	274	274	-
Stage 2	-	-	-	-	-	-	274	288	-	117	103	-
Follow-up Headway	2.218	-	-	2.218	-	-	3.518	4.018	3.318	3.518	4.018	3.318
Pot Capacity-1 Maneuver	1410	-	-	1489	-	-	580	545	952	568	555	891
Stage 1	-	-	-	-	-	-	903	810	-	732	683	-
Stage 2	-	-	-	-	-	-	732	674	-	888	810	-
Time blocked-Platoon, %		-	-		-	-						
Mov Capacity-1 Maneuver	1410	-	-	1489	-	-	562	523	952	535	533	891
Mov Capacity-2 Maneuver	-	-	-	-	-	-	562	523	-	535	533	-
Stage 1	-	-	-	-	-	-	903	810	-	732	655	-
Stage 2	-	-	-	-	-	-	703	647	-	863	810	-

Approach	EB	WB	NB	SB
HCM Control Delay, s	0	2	8.9	11.9
HCM LOS			A	B

Minor Lane / Major Mvmt	NBLn1	EBL	EBT	EBR	WBL	WBT	WBR	SBLn1
Capacity (veh/h)	952	1410	-	-	1489	-	-	535
HCM Lane V/C Ratio	0.029	-	-	-	0.04	-	-	0.02
HCM Control Delay (s)	8.9	0	-	-	7.519	-	-	11.9
HCM Lane LOS	A	A			A			B
HCM 95th %tile Q(veh)	0.088	0	-	-	0.125	-	-	0.062

Notes
~ : Volume Exceeds Capacity; $: Delay Exceeds 300 Seconds; Error : Computation Not Defined

Intersection	
Intersection Delay, s/veh	0.9

Movement	EBL	EBT	EBR	WBL	WBT	WBR	NBL	NBT	NBR	SBL	SBT	SBR
Vol, veh/h	0	135	0	10	210	40	0	0	5	20	0	0
Conflicting Peds, #/hr	0	0	0	0	0	0	0	0	0	0	0	0
Sign Control	Free	Free	Free	Free	Free	Free	Stop	Stop	Stop	Stop	Stop	Stop
RT Channelized	-	-	None	-	-	None	-	-	None	-	-	None
Storage Length	200	-	-	200	-	-	-	-	-	-	-	-
Veh in Median Storage, #	-	0	-	-	0	-	-	0	-	-	0	-
Grade, %	-	0	-	-	0	-	-	0	-	-	0	-
Peak Hour Factor	92	92	92	92	92	92	92	92	92	92	92	92
Heavy Vehicles, %	2	2	2	2	2	2	2	2	2	2	2	2
Mvmt Flow	0	147	0	11	228	43	0	0	5	22	0	0

Major/Minor	Major1			Major2			Minor1			Minor2		
Conflicting Flow All	272	0	0	147	0	0	419	440	147	421	419	250
Stage 1	-	-	-	-	-	-	147	147	-	272	272	-
Stage 2	-	-	-	-	-	-	272	293	-	149	147	-
Follow-up Headway	2.218	-	-	2.218	-	-	3.518	4.018	3.318	3.518	4.018	3.318
Pot Capacity-1 Maneuver	1291	-	-	1435	-	-	544	511	900	543	525	789
Stage 1	-	-	-	-	-	-	856	775	-	734	685	-
Stage 2	-	-	-	-	-	-	734	670	-	854	775	-
Time blocked-Platoon, %		-	-		-	-						
Mov Capacity-1 Maneuver	1291	-	-	1435	-	-	541	507	900	537	521	789
Mov Capacity-2 Maneuver	-	-	-	-	-	-	541	507	-	537	521	-
Stage 1	-	-	-	-	-	-	856	775	-	734	680	-
Stage 2	-	-	-	-	-	-	728	665	-	849	775	-

Approach	EB	WB	NB	SB
HCM Control Delay, s	0	0.3	9	12
HCM LOS			A	B

Minor Lane / Major Mvmt	NBLn1	EBL	EBT	EBR	WBL	WBT	WBR	SBLn1
Capacity (veh/h)	900	1291	-	-	1435	-	-	537
HCM Lane V/C Ratio	0.006	-	-	-	0.008	-	-	0.04
HCM Control Delay (s)	9	0	-	-	7.528	-	-	12
HCM Lane LOS	A	A			A			B
HCM 95th %tile Q(veh)	0.018	0	-	-	0.023	-	-	0.126

Notes

~ : Volume Exceeds Capacity; $: Delay Exceeds 300 Seconds; Error : Computation Not Defined

Movement	EBL	EBT	EBR	WBL	WBT	WBR	NBL	NBT	NBR	SBL	SBT	SBR
Lane Configurations												
Volume (veh/h)	130	0	30	5	0	15	50	680	10	30	780	210
Number	7	4	14	3	8	18	5	2	12	1	6	16
Initial Q (Qb), veh	0	0	0	0	0	0	0	0	0	0	0	0
Ped-Bike Adj(A_pbT)	1.00		1.00	1.00		1.00	1.00		1.00	1.00		1.00
Parking Bus Adj	1.00	1.00	1.00	1.00	1.00	1.00	1.00	1.00	1.00	1.00	1.00	1.00
Adj Sat Flow veh/h/ln	186.3	186.3	190.0	190.0	186.3	190.0	186.3	186.3	190.0	186.3	186.3	186.3
Lanes	1	1	0	0	1	0	1	1	0	1	1	1
Cap, veh/h	327	0	235	109	31	180	502	1283	19	489	1306	1110
Arrive On Green	0.15	0.00	0.15	0.15	0.00	0.15	0.70	0.70	0.70	1.00	1.00	1.00
Sat Flow, veh/h	1392	0	1583	170	209	1210	522	1831	27	709	1863	1583
Grp Volume(v), veh/h	141	0	33	21	0	0	54	0	750	33	848	228
Grp Sat Flow(s),veh/h/ln	1392	0	1583	1588	0	0	522	0	1858	709	1863	1583
Q Serve(g_s), s	5.2	0.0	1.0	0.0	0.0	0.0	1.8	0.0	10.8	0.8	0.0	0.0
Cycle Q Clear(g_c), s	5.8	0.0	1.0	0.6	0.0	0.0	1.8	0.0	10.8	11.5	0.0	0.0
Prop In Lane	1.00		1.00	0.24		0.76	1.00		0.01	1.00		1.00
Lane Grp Cap(c), veh/h	327	0	235	320	0	0	502	0	1303	489	1306	1110
V/C Ratio(X)	0.43	0.00	0.14	0.07	0.00	0.00	0.11	0.00	0.58	0.07	0.65	0.21
Avail Cap(c_a), veh/h	774	0	745	811	0	0	990	0	3040	1153	3048	2591
HCM Platoon Ratio	1.00	1.00	1.00	1.00	1.00	1.00	1.00	1.00	1.00	2.00	2.00	2.00
Upstream Filter(I)	1.00	0.00	1.00	1.00	0.00	0.00	1.00	0.00	1.00	0.42	0.42	0.42
Uniform Delay (d), s/veh	22.0	0.0	19.7	19.5	0.0	0.0	2.6	0.0	4.0	1.7	0.0	0.0
Incr Delay (d2), s/veh	0.9	0.0	0.3	0.1	0.0	0.0	0.4	0.0	1.9	0.1	1.1	0.2
Initial Q Delay(d3),s/veh	0.0	0.0	0.0	0.0	0.0	0.0	0.0	0.0	0.0	0.0	0.0	0.0
%ile Back of Q (50%), veh/ln	1.8	0.0	0.4	0.2	0.0	0.0	0.2	0.0	3.8	0.1	0.4	0.1
Lane Grp Delay (d), s/veh	22.9	0.0	20.0	19.6	0.0	0.0	3.1	0.0	5.8	1.8	1.1	0.2
Lane Grp LOS	C		B	B			A		A	A	A	A
Approach Vol, veh/h		174			21			804			1109	
Approach Delay, s/veh		22.3			19.6			5.7			0.9	
Approach LOS		C			B			A			A	

Timer				
Assigned Phs	4	8	2	6
Phs Duration (G+Y+Rc), s	11.9	11.9	41.3	41.3
Change Period (Y+Rc), s	4.0	4.0	4.0	4.0
Max Green Setting (Gmax), s	25.0	25.0	87.0	87.0
Max Q Clear Time (g_c+I1), s	7.8	2.6	12.8	13.5
Green Ext Time (p_c), s	0.6	0.7	23.8	23.7

Intersection Summary	
HCM 2010 Ctrl Delay	4.7
HCM 2010 LOS	A

Notes

Intersection	
Intersection Delay, s/veh	0

Movement	EBL	EBT	EBR	WBL	WBT	WBR	NBL	NBT	NBR	SBL	SBT	SBR
Vol, veh/h	0	15	0	0	5	0	0	0	0	0	0	0
Conflicting Peds, #/hr	0	0	0	0	0	0	0	0	0	0	0	0
Sign Control	Free	Free	Free	Free	Free	Free	Stop	Stop	Stop	Stop	Stop	Stop
RT Channelized	-	-	None	-	-	None	-	-	None	-	-	None
Storage Length	-	-	-	-	-	-	-	-	-	-	-	-
Veh in Median Storage, #	-	0	-	-	0	-	-	0	-	-	0	-
Grade, %	-	0	-	-	0	-	-	0	-	-	0	-
Peak Hour Factor	92	92	92	92	92	92	92	92	92	92	92	92
Heavy Vehicles, %	2	2	2	2	2	2	2	2	2	2	2	2
Mvmt Flow	0	16	0	0	5	0	0	0	0	0	0	0

Major/Minor	Major1			Major2			Minor1			Minor2		
Conflicting Flow All	5	0	0	16	0	0	21	21	16	21	21	5
Stage 1	-	-	-	-	-	-	16	16	-	5	5	-
Stage 2	-	-	-	-	-	-	5	5	-	16	16	-
Follow-up Headway	2.218	-	-	2.218	-	-	3.518	4.018	3.318	3.518	4.018	3.318
Pot Capacity-1 Maneuver	1616	-	-	1602	-	-	992	873	1063	992	873	1078
Stage 1	-	-	-	-	-	-	1004	882	-	1017	892	-
Stage 2	-	-	-	-	-	-	1017	892	-	1004	882	-
Time blocked-Platoon, %		-	-		-	-						
Mov Capacity-1 Maneuver	1616	-	-	1602	-	-	992	873	1063	992	873	1078
Mov Capacity-2 Maneuver	-	-	-	-	-	-	992	873	-	992	873	-
Stage 1	-	-	-	-	-	-	1004	882	-	1017	892	-
Stage 2	-	-	-	-	-	-	1017	892	-	1004	882	-

Approach	EB	WB	NB	SB
HCM Control Delay, s	0	0	0	0
HCM LOS			A	A

Minor Lane / Major Mvmt	NBLn1	EBL	EBT	EBR	WBL	WBT	WBR	SBLn1
Capacity (veh/h)	0	1616	-	-	1602	-	-	0
HCM Lane V/C Ratio	+	-	-	-	-	-	-	+
HCM Control Delay (s)	0	0	-	-	0	-	-	0
HCM Lane LOS	A	A			A			A
HCM 95th %tile Q(veh)	+	0	-	-	0	-	-	+

Notes

~ : Volume Exceeds Capacity; $: Delay Exceeds 300 Seconds; Error : Computation Not Defined

Intersection	
Intersection Delay, s/veh	0.6

Movement	EBL	EBT	EBR	WBL	WBT	WBR	NBL	NBT	NBR	SBL	SBT	SBR
Vol, veh/h	5	0	0	5	0	10	0	720	5	20	780	10
Conflicting Peds, #/hr	0	0	0	0	0	0	0	0	0	0	0	0
Sign Control	Stop	Stop	Stop	Stop	Stop	Stop	Free	Free	Free	Free	Free	Free
RT Channelized	-	-	None	-	-	None	-	-	None	-	-	None
Storage Length	-	-	-	-	-	-	200	-	-	200	-	-
Veh in Median Storage, #	-	0	-	-	0	-	-	0	-	-	0	-
Grade, %	-	0	-	-	0	-	-	0	-	-	0	-
Peak Hour Factor	92	92	92	92	92	92	92	92	92	92	92	92
Heavy Vehicles, %	2	2	2	2	2	2	2	2	2	2	2	2
Mvmt Flow	5	0	0	5	0	11	0	783	5	22	848	11

Major/Minor	Minor2			Minor1			Major1			Major2		
Conflicting Flow All	1688	1685	853	1682	1687	785	859	0	0	788	0	0
Stage 1	897	897	-	785	785	-	-	-	-	-	-	-
Stage 2	791	788	-	897	902	-	-	-	-	-	-	-
Follow-up Headway	3.518	4.018	3.318	3.518	4.018	3.318	2.218	-	-	2.218	-	-
Pot Capacity-1 Maneuver	74	94	359	75	94	393	782	-	-	831	-	-
Stage 1	334	358	-	386	404	-	-	-	-	-	-	-
Stage 2	383	402	-	334	356	-	-	-	-	-	-	-
Time blocked-Platoon, %								-	-		-	-
Mov Capacity-1 Maneuver	70	92	359	73	92	393	782	-	-	831	-	-
Mov Capacity-2 Maneuver	70	92	-	73	92	-	-	-	-	-	-	-
Stage 1	334	349	-	386	404	-	-	-	-	-	-	-
Stage 2	372	402	-	325	347	-	-	-	-	-	-	-

Approach	EB	WB	NB	SB
HCM Control Delay, s	60.7	30	0	0.2
HCM LOS	F	D		

Minor Lane / Major Mvmt	NBL	NBT	NBR	EBLn1	WBLn1	SBL	SBT	SBR
Capacity (veh/h)	782	-	-	70	160	831	-	-
HCM Lane V/C Ratio	-	-	-	0.078	0.102	0.026	-	-
HCM Control Delay (s)	0	-	-	60.7	30	9.448	-	-
HCM Lane LOS	A			F	D	A		
HCM 95th %tile Q(veh)	0	-	-	0.245	0.334	0.081	-	-

Notes

~ : Volume Exceeds Capacity; $: Delay Exceeds 300 Seconds; Error : Computation Not Defined

Intersection	
Intersection Delay, s/veh	0

Movement	EBL	EBT	EBR	WBL	WBT	WBR	NBL	NBT	NBR	SBL	SBT	SBR
Vol, veh/h	0	5	0	0	0	0	0	0	0	0	0	0
Conflicting Peds, #/hr	0	0	0	0	0	0	0	0	0	0	0	0
Sign Control	Free	Free	Free	Free	Free	Free	Stop	Stop	Stop	Stop	Stop	Stop
RT Channelized	-	-	None	-	-	None	-	-	None	-	-	None
Storage Length	-	-	-	-	-	-	-	-	-	-	-	-
Veh in Median Storage, #	-	0	-	-	0	-	-	0	-	-	0	-
Grade, %	-	0	-	-	0	-	-	0	-	-	0	-
Peak Hour Factor	92	92	92	92	92	92	92	92	92	92	92	92
Heavy Vehicles, %	2	2	2	2	2	2	2	2	2	2	2	2
Mvmt Flow	0	5	0	0	0	0	0	0	0	0	0	0

Major/Minor	Major1			Major2			Minor1			Minor2		
Conflicting Flow All	0	0	0	5	0	0	5	5	5	5	5	0
Stage 1	-	-	-	-	-	-	5	5	-	0	0	-
Stage 2	-	-	-	-	-	-	0	0	-	5	5	-
Follow-up Headway	2.218	-	-	2.218	-	-	3.518	4.018	3.318	3.518	4.018	3.318
Pot Capacity-1 Maneuver	-	-	-	1616	-	-	1016	890	1078	1016	890	-
Stage 1	-	-	-	-	-	-	1017	892	-	-	-	-
Stage 2	-	-	-	-	-	-	-	-	-	1017	892	-
Time blocked-Platoon, %		-	-		-	-						
Mov Capacity-1 Maneuver	-	-	-	1616	-	-	-	890	1078	1016	890	-
Mov Capacity-2 Maneuver	-	-	-	-	-	-	-	890	-	1016	890	-
Stage 1	-	-	-	-	-	-	1017	892	-	-	-	-
Stage 2	-	-	-	-	-	-	-	-	-	1017	892	-

Approach	EB	WB	NB	SB
HCM Control Delay, s	0	0	0	0
HCM LOS			A	A

Minor Lane / Major Mvmt	NBLn1	EBL	EBT	EBR	WBL	WBT	WBR	SBLn1
Capacity (veh/h)	+	-	-	-	1616	-	-	+
HCM Lane V/C Ratio	+	-	-	-	-	-	-	+
HCM Control Delay (s)	0	0	-	-	0	-	-	0
HCM Lane LOS	A	A			A			A
HCM 95th %tile Q(veh)	+	-	-	-	0	-	-	+

Notes
~ : Volume Exceeds Capacity; $: Delay Exceeds 300 Seconds; Error : Computation Not Defined

Intersection	
Intersection Delay, s/veh	0.6

Movement	EBL	EBT	EBR	WBL	WBT	WBR	NBL	NBT	NBR	SBL	SBT	SBR
Vol, veh/h	5	0	0	5	0	10	5	710	5	20	750	15
Conflicting Peds, #/hr	0	0	0	0	0	0	0	0	0	0	0	0
Sign Control	Stop	Stop	Stop	Stop	Stop	Stop	Free	Free	Free	Free	Free	Free
RT Channelized	-	-	None	-	-	None	-	-	None	-	-	None
Storage Length	-	-	-	-	-	-	200	-	-	200	-	-
Veh in Median Storage, #	-	0	-	-	0	-	-	0	-	-	0	-
Grade, %	-	0	-	-	0	-	-	0	-	-	0	-
Peak Hour Factor	92	92	92	92	92	92	92	92	92	92	92	92
Heavy Vehicles, %	2	2	2	2	2	2	2	2	2	2	2	2
Mvmt Flow	5	0	0	5	0	11	5	772	5	22	815	16

Major/Minor	Minor2			Minor1			Major1			Major2		
Conflicting Flow All	1658	1655	823	1652	1660	774	832	0	0	777	0	0
Stage 1	867	867	-	785	785	-	-	-	-	-	-	-
Stage 2	791	788	-	867	875	-	-	-	-	-	-	-
Follow-up Headway	3.518	4.018	3.318	3.518	4.018	3.318	2.218	-	-	2.218	-	-
Pot Capacity-1 Maneuver	78	98	373	79	97	398	801	-	-	839	-	-
Stage 1	348	370	-	386	404	-	-	-	-	-	-	-
Stage 2	383	402	-	348	367	-	-	-	-	-	-	-
Time blocked-Platoon, %								-	-		-	-
Mov Capacity-1 Maneuver	74	95	373	77	94	398	801	-	-	839	-	-
Mov Capacity-2 Maneuver	74	95	-	77	94	-	-	-	-	-	-	-
Stage 1	346	360	-	384	401	-	-	-	-	-	-	-
Stage 2	370	399	-	339	357	-	-	-	-	-	-	-

Approach	EB	WB	NB	SB
HCM Control Delay, s	57.5	28.9	0.1	0.2
HCM LOS	F	D		

Minor Lane / Major Mvmt	NBL	NBT	NBR	EBLn1	WBLn1	SBL	SBT	SBR
Capacity (veh/h)	801	-	-	74	167	839	-	-
HCM Lane V/C Ratio	0.007	-	-	0.073	0.098	0.026	-	-
HCM Control Delay (s)	9.525	-	-	57.5	28.9	9.405	-	-
HCM Lane LOS	A			F	D	A		
HCM 95th %tile Q(veh)	0.02	-	-	0.232	0.319	0.08	-	-

Notes
~ : Volume Exceeds Capacity; $: Delay Exceeds 300 Seconds; Error : Computation Not Defined

Intersection	
Intersection Delay, s/veh	0

Movement	EBL	EBT	EBR	WBL	WBT	WBR	NBL	NBT	NBR	SBL	SBT	SBR
Vol, veh/h	0	5	0	0	0	0	0	0	0	0	0	0
Conflicting Peds, #/hr	0	0	0	0	0	0	0	0	0	0	0	0
Sign Control	Free	Free	Free	Free	Free	Free	Stop	Stop	Stop	Stop	Stop	Stop
RT Channelized	-	-	None	-	-	None	-	-	None	-	-	None
Storage Length	-	-	-	-	-	-	-	-	-	-	-	-
Veh in Median Storage, #	-	0	-	-	0	-	-	0	-	-	0	-
Grade, %	-	0	-	-	0	-	-	0	-	-	0	-
Peak Hour Factor	92	92	92	92	92	92	92	92	92	92	92	92
Heavy Vehicles, %	2	2	2	2	2	2	2	2	2	2	2	2
Mvmt Flow	0	5	0	0	0	0	0	0	0	0	0	0

Major/Minor	Major1			Major2			Minor1			Minor2		
Conflicting Flow All	0	0	0	5	0	0	5	5	5	5	5	0
Stage 1	-	-	-	-	-	-	5	5	-	0	0	-
Stage 2	-	-	-	-	-	-	0	0	-	5	5	-
Follow-up Headway	2.218	-	-	2.218	-	-	3.518	4.018	3.318	3.518	4.018	3.318
Pot Capacity-1 Maneuver	-	-	-	1616	-	-	1016	890	1078	1016	890	-
Stage 1	-	-	-	-	-	-	1017	892	-	-	-	-
Stage 2	-	-	-	-	-	-	-	-	-	1017	892	-
Time blocked-Platoon, %		-	-		-	-						
Mov Capacity-1 Maneuver	-	-	-	1616	-	-	-	890	1078	1016	890	-
Mov Capacity-2 Maneuver	-	-	-	-	-	-	-	890	-	1016	890	-
Stage 1	-	-	-	-	-	-	1017	892	-	-	-	-
Stage 2	-	-	-	-	-	-	-	-	-	1017	892	-

Approach	EB	WB	NB	SB
HCM Control Delay, s	0	0	0	0
HCM LOS			A	A

Minor Lane / Major Mvmt	NBLn1	EBL	EBT	EBR	WBL	WBT	WBR	SBLn1
Capacity (veh/h)	+	-	-	-	1616	-	-	+
HCM Lane V/C Ratio	+	-	-	-	-	-	-	+
HCM Control Delay (s)	0	0	-	-	0	-	-	0
HCM Lane LOS	A	A			A			A
HCM 95th %tile Q(veh)	+	-	-	-	0	-	-	+

Notes
~ : Volume Exceeds Capacity; $: Delay Exceeds 300 Seconds; Error : Computation Not Defined

Intersection	
Intersection Delay, s/veh	0.8

Movement	EBL	EBT	EBR	WBL	WBT	WBR	NBL	NBT	NBR	SBL	SBT	SBR
Vol, veh/h	10	0	0	5	0	10	5	705	5	20	720	15
Conflicting Peds, #/hr	0	0	0	0	0	0	0	0	0	0	0	0
Sign Control	Stop	Stop	Stop	Stop	Stop	Stop	Free	Free	Free	Free	Free	Free
RT Channelized	-	-	None	-	-	None	-	-	None	-	-	None
Storage Length	-	-	-	-	-	-	200	-	-	200	-	-
Veh in Median Storage, #	-	0	-	-	0	-	-	0	-	-	0	-
Grade, %	-	0	-	-	0	-	-	0	-	-	0	-
Peak Hour Factor	92	92	92	92	92	92	92	92	92	92	92	92
Heavy Vehicles, %	2	2	2	2	2	2	2	2	2	2	2	2
Mvmt Flow	11	0	0	5	0	11	5	766	5	22	783	16

Major/Minor	Minor2			Minor1			Major1			Major2		
Conflicting Flow All	1619	1617	791	1614	1622	769	799	0	0	772	0	0
Stage 1	834	834	-	780	780	-	-	-	-	-	-	-
Stage 2	785	783	-	834	842	-	-	-	-	-	-	-
Follow-up Headway	3.518	4.018	3.318	3.518	4.018	3.318	2.218	-	-	2.218	-	-
Pot Capacity-1 Maneuver	83	103	390	84	103	401	824	-	-	843	-	-
Stage 1	362	383	-	388	406	-	-	-	-	-	-	-
Stage 2	386	404	-	362	380	-	-	-	-	-	-	-
Time blocked-Platoon, %								-	-		-	-
Mov Capacity-1 Maneuver	79	100	390	82	100	401	824	-	-	843	-	-
Mov Capacity-2 Maneuver	79	100	-	82	100	-	-	-	-	-	-	-
Stage 1	360	373	-	386	404	-	-	-	-	-	-	-
Stage 2	373	402	-	353	370	-	-	-	-	-	-	-

Approach	EB	WB	NB	SB
HCM Control Delay, s	57.7	27.7	0.1	0.2
HCM LOS	F	D		

Minor Lane / Major Mvmt	NBL	NBT	NBR	EBLn1	WBLn1	SBL	SBT	SBR
Capacity (veh/h)	824	-	-	79	175	843	-	-
HCM Lane V/C Ratio	0.007	-	-	0.138	0.093	0.026	-	-
HCM Control Delay (s)	9.398	-	-	57.7	27.7	9.383	-	-
HCM Lane LOS	A			F	D	A		
HCM 95th %tile Q(veh)	0.02	-	-	0.454	0.304	0.079	-	-

Notes

~ : Volume Exceeds Capacity; $: Delay Exceeds 300 Seconds; Error : Computation Not Defined

Intersection	
Intersection Delay, s/veh	19.4
Intersection LOS	C

Movement	EBL	EBT	EBR	WBL	WBT	WBR	NBL	NBT	NBR	SBL	SBT	SBR
Vol, veh/h	230	35	125	50	40	35	200	140	40	65	165	250
Peak Hour Factor	0.92	0.92	0.92	0.92	0.92	0.92	0.92	0.92	0.92	0.92	0.92	0.92
Heavy Vehicles, %	2	2	2	2	2	2	2	2	2	2	2	2
Mvmt Flow	250	38	136	54	43	38	217	152	43	71	179	272
Number of Lanes	1	1	0	1	1	0	1	1	0	1	1	1

Approach	EB	WB	NB	SB
Opposing Approach	WB	EB	SB	NB
Opposing Lanes	2	2	3	2
Conflicting Approach Left	SB	NB	EB	WB
Conflicting Lanes Left	3	2	2	2
Conflicting Approach Right	NB	SB	WB	EB
Conflicting Lanes Right	2	3	2	2
HCM Control Delay	21.6	14.5	20.2	18.2
HCM LOS	C	B	C	C

Lane	NBLn1	NBLn2	EBLn1	EBLn2	WBLn1	WBLn2	SBLn1	SBLn2	SBLn3
Vol Left, %	100%	0%	100%	0%	100%	0%	100%	0%	0%
Vol Thru, %	0%	78%	0%	22%	0%	53%	0%	100%	0%
Vol Right, %	0%	22%	0%	78%	0%	47%	0%	0%	100%
Sign Control	Stop	Stop	Stop	Stop	Stop	Stop	Stop	Stop	Stop
Traffic Vol by Lane	200	180	230	160	50	75	65	165	250
LT Vol	0	140	0	35	0	40	0	165	0
Through Vol	0	40	0	125	0	35	0	0	250
RT Vol	200	0	230	0	50	0	65	0	0
Lane Flow Rate	217	196	250	174	54	82	71	179	272
Geometry Grp	8	8	8	8	8	8	8	8	8
Degree of Util (X)	0.546	0.455	0.626	0.384	0.152	0.208	0.174	0.416	0.576
Departure Headway (Hd)	9.047	8.37	9.021	7.949	10.048	9.193	8.871	8.356	7.636
Convergence, Y/N	Yes	Yes	Yes	Yes	Yes	Yes	Yes	Yes	Yes
Cap	400	430	400	454	357	390	405	432	473
Service Time	6.79	6.114	6.762	5.691	7.801	6.946	6.612	6.098	5.377
HCM Lane V/C Ratio	0.542	0.456	0.625	0.383	0.151	0.21	0.175	0.414	0.575
HCM Control Delay	22.2	17.9	25.8	15.6	14.6	14.4	13.5	16.9	20.3
HCM Lane LOS	C	C	D	C	B	B	B	C	C
HCM 95th-tile Q	3.2	2.3	4.1	1.8	0.5	0.8	0.6	2	3.6

Notes

~ : Volume Exceeds Capacity; $: Delay Exceeds 300 Seconds; Error : Computation Not Defined

Intersection	
Intersection Delay, s/veh	14

Movement	WBL	WBR	NBT	NBR	SBL	SBT
Vol, veh/h	65	395	315	55	375	340
Conflicting Peds, #/hr	0	0	0	0	0	0
Sign Control	Stop	Stop	Free	Free	Free	Free
RT Channelized	-	None	-	None	-	None
Storage Length	0	0	-	-	200	-
Veh in Median Storage, #	0	-	0	-	-	0
Grade, %	0	-	0	-	-	0
Peak Hour Factor	92	92	92	92	92	92
Heavy Vehicles, %	2	2	2	2	2	2
Mvmt Flow	71	429	342	60	408	370

Major/Minor	Minor1		Major1		Major2	
Conflicting Flow All	1557	372	0	0	402	0
Stage 1	372	-	-	-	-	-
Stage 2	1185	-	-	-	-	-
Follow-up Headway	3.518	3.318	-	-	2.218	-
Pot Capacity-1 Maneuver	124	674	-	-	1157	-
Stage 1	697	-	-	-	-	-
Stage 2	290	-	-	-	-	-
Time blocked-Platoon, %			-	-		-
Mov Capacity-1 Maneuver	80	674	-	-	1157	-
Mov Capacity-2 Maneuver	80	-	-	-	-	-
Stage 1	697	-	-	-	-	-
Stage 2	188	-	-	-	-	-

Approach	WB	NB	SB
HCM Control Delay, s	39.1	0	5.1
HCM LOS	E		

Minor Lane / Major Mvmt	NBT	NBR	WBLn1	WBLn2	SBL	SBT
Capacity (veh/h)	-	-	80	674	1157	-
HCM Lane V/C Ratio	-	-	0.883	0.637	0.352	-
HCM Control Delay (s)	-	-	160	19.2	9.794	-
HCM Lane LOS			F	C	A	
HCM 95th %tile Q(veh)	-	-	4.596	4.579	1.604	-

Notes

~ : Volume Exceeds Capacity; $: Delay Exceeds 300 Seconds; Error : Computation Not Defined

Intersection	
Intersection Delay, s/veh	0.7

Movement	EBT	EBR	WBL	WBT	NBL	NBR
Vol, veh/h	75	0	10	85	0	5
Conflicting Peds, #/hr	0	0	0	0	0	0
Sign Control	Free	Free	Free	Free	Stop	Stop
RT Channelized	-	None	-	None	-	None
Storage Length	-	-	-	-	0	-
Veh in Median Storage, #	0	-	-	0	0	-
Grade, %	0	-	-	0	0	-
Peak Hour Factor	92	92	92	92	92	92
Heavy Vehicles, %	2	2	2	2	2	2
Mvmt Flow	82	0	11	92	0	5

Major/Minor	Major1		Major2		Minor1	
Conflicting Flow All	0	0	82	0	196	82
Stage 1	-	-	-	-	82	-
Stage 2	-	-	-	-	114	-
Follow-up Headway	-	-	2.218	-	3.518	3.318
Pot Capacity-1 Maneuver	-	-	1515	-	793	978
Stage 1	-	-	-	-	941	-
Stage 2	-	-	-	-	911	-
Time blocked-Platoon, %	-	-		-		
Mov Capacity-1 Maneuver	-	-	1515	-	787	978
Mov Capacity-2 Maneuver	-	-	-	-	787	-
Stage 1	-	-	-	-	941	-
Stage 2	-	-	-	-	904	-

Approach	EB	WB	NB
HCM Control Delay, s	0	0.8	8.7
HCM LOS			A

Minor Lane / Major Mvmt	NBLn1	EBT	EBR	WBL	WBT
Capacity (veh/h)	978	-	-	1515	-
HCM Lane V/C Ratio	0.006	-	-	0.007	-
HCM Control Delay (s)	8.7	-	-	7.393	0
HCM Lane LOS	A			A	A
HCM 95th %tile Q(veh)	0.017	-	-	0.022	-

Notes
~ : Volume Exceeds Capacity; $: Delay Exceeds 300 Seconds; Error : Computation Not Defined

Intersection	
Intersection Delay, s/veh	1.7

Movement	EBL	EBR	NBL	NBT	SBT	SBR
Vol, veh/h	80	0	0	290	310	95
Conflicting Peds, #/hr	0	0	0	0	0	0
Sign Control	Stop	Stop	Free	Free	Free	Free
RT Channelized	-	None	-	None	-	None
Storage Length	-	-	-	-	-	-
Veh in Median Storage, #	0	-	-	0	0	-
Grade, %	0	-	-	0	0	-
Peak Hour Factor	92	92	92	92	92	92
Heavy Vehicles, %	2	2	2	2	2	2
Mvmt Flow	87	0	0	315	337	103

Major/Minor	Minor2		Major1		Major2	
Conflicting Flow All	704	389	440	0	-	0
Stage 1	389	-	-	-	-	-
Stage 2	315	-	-	-	-	-
Follow-up Headway	3.518	3.318	2.218	-	-	-
Pot Capacity-1 Maneuver	403	659	1120	-	-	-
Stage 1	685	-	-	-	-	-
Stage 2	740	-	-	-	-	-
Time blocked-Platoon, %				-	-	-
Mov Capacity-1 Maneuver	403	659	1120	-	-	-
Mov Capacity-2 Maneuver	403	-	-	-	-	-
Stage 1	685	-	-	-	-	-
Stage 2	740	-	-	-	-	-

Approach	EB	NB	SB
HCM Control Delay, s	16.4	0	0
HCM LOS	C		

Minor Lane / Major Mvmt	NBL	NBT	EBLn1	SBT	SBR
Capacity (veh/h)	1120	-	403	-	-
HCM Lane V/C Ratio	-	-	0.216	-	-
HCM Control Delay (s)	0	-	16.4	-	-
HCM Lane LOS	A		C		
HCM 95th %tile Q(veh)	0	-	0.809	-	-

Notes

~ : Volume Exceeds Capacity; $: Delay Exceeds 300 Seconds; Error : Computation Not Defined

Intersection	
Intersection Delay, s/veh	0.8

Movement	EBL	EBT	EBR	WBL	WBT	WBR	NBL	NBT	NBR	SBL	SBT	SBR
Vol, veh/h	10	0	0	0	0	15	0	265	0	20	270	20
Conflicting Peds, #/hr	0	0	0	0	0	0	0	0	0	0	0	0
Sign Control	Stop	Stop	Stop	Stop	Stop	Stop	Free	Free	Free	Free	Free	Free
RT Channelized	-	-	None	-	-	None	-	-	None	-	-	None
Storage Length	-	-	-	-	-	-	-	-	-	-	-	-
Veh in Median Storage, #	-	0	-	-	0	-	-	0	-	-	0	-
Grade, %	-	0	-	-	0	-	-	0	-	-	0	-
Peak Hour Factor	92	92	92	92	92	92	92	92	92	92	92	92
Heavy Vehicles, %	2	2	2	2	2	2	2	2	2	2	2	2
Mvmt Flow	11	0	0	0	0	16	0	288	0	22	293	22

Major/Minor	Minor2			Minor1			Major1			Major2		
Conflicting Flow All	644	636	304	636	647	288	315	0	0	288	0	0
Stage 1	348	348	-	288	288	-	-	-	-	-	-	-
Stage 2	296	288	-	348	359	-	-	-	-	-	-	-
Follow-up Headway	3.518	4.018	3.318	3.518	4.018	3.318	2.218	-	-	2.218	-	-
Pot Capacity-1 Maneuver	386	395	736	391	390	751	1245	-	-	1274	-	-
Stage 1	668	634	-	720	674	-	-	-	-	-	-	-
Stage 2	712	674	-	668	627	-	-	-	-	-	-	-
Time blocked-Platoon, %								-	-		-	-
Mov Capacity-1 Maneuver	372	387	736	385	382	751	1245	-	-	1274	-	-
Mov Capacity-2 Maneuver	372	387	-	385	382	-	-	-	-	-	-	-
Stage 1	668	621	-	720	674	-	-	-	-	-	-	-
Stage 2	697	674	-	654	614	-	-	-	-	-	-	-

Approach	EB	WB	NB	SB
HCM Control Delay, s	15	9.9	0	0.5
HCM LOS	C	A		

Minor Lane / Major Mvmt	NBL	NBT	NBR	EBLn1	WBLn1	SBL	SBT	SBR
Capacity (veh/h)	1245	-	-	372	751	1274	-	-
HCM Lane V/C Ratio	-	-	-	0.029	0.022	0.017	-	-
HCM Control Delay (s)	0	-	-	15	9.9	7.875	0	-
HCM Lane LOS	A			C	A	A	A	
HCM 95th %tile Q(veh)	0	-	-	0.09	0.067	0.052	-	-

Notes
~ : Volume Exceeds Capacity; $: Delay Exceeds 300 Seconds; Error : Computation Not Defined

Movement	SEL	SET	NWT	NWR	SWL	SWR
Lane Configurations						
Volume (veh/h)	475	1330	1545	230	155	280
Number	1	6	2	12	3	18
Initial Q (Qb), veh	0	0	0	0	0	0
Ped-Bike Adj(A_pbT)	1.00			1.00	1.00	1.00
Parking Bus Adj	1.00	1.00	1.00	1.00	1.00	1.00
Adj Sat Flow veh/h/ln	186.3	186.3	186.3	190.0	186.3	186.3
Lanes	1	2	2	0	1	1
Cap, veh/h	469	2913	1649	239	258	230
Arrive On Green	0.45	1.00	0.52	0.52	0.15	0.15
Sat Flow, veh/h	1774	3725	3182	462	1774	1583
Grp Volume(v), veh/h	516	1446	965	964	168	304
Grp Sat Flow(s),veh/h/ln	1774	1863	1863	1781	1774	1583
Q Serve(g_s), s	25.0	0.0	57.0	57.0	9.8	16.0
Cycle Q Clear(g_c), s	25.0	0.0	57.0	57.0	9.8	16.0
Prop In Lane	1.00			0.26	1.00	1.00
Lane Grp Cap(c), veh/h	469	2913	965	923	258	230
V/C Ratio(X)	1.10	0.50	1.00	1.04	0.65	1.32
Avail Cap(c_a), veh/h	469	2913	965	923	258	230
HCM Platoon Ratio	2.00	2.00	1.00	1.00	1.00	1.00
Upstream Filter(I)	0.16	0.16	0.84	0.84	1.00	1.00
Uniform Delay (d), s/veh	24.6	0.0	26.5	26.5	44.4	47.0
Incr Delay (d2), s/veh	51.3	0.1	26.6	39.5	5.7	171.1
Initial Q Delay(d3),s/veh	0.0	0.0	0.0	0.0	0.0	0.0
%ile Back of Q (50%), veh/ln	11.5	0.0	32.6	34.5	4.9	17.4
Lane Grp Delay (d), s/veh	75.9	0.1	53.1	66.0	50.1	218.1
Lane Grp LOS	F	A	F	F	D	F
Approach Vol, veh/h		1962	1929		472	
Approach Delay, s/veh		20.0	59.6		158.3	
Approach LOS		C	E		F	

Timer			
Assigned Phs	1	6	2
Phs Duration (G+Y+Rc), s	29.0	90.0	61.0
Change Period (Y+Rc), s	4.0	4.0	4.0
Max Green Setting (Gmax), s	25.0	86.0	57.0
Max Q Clear Time (g_c+I1), s	27.0	2.0	59.0
Green Ext Time (p_c), s	0.0	70.2	0.0

Intersection Summary	
HCM 2010 Ctrl Delay	52.5
HCM 2010 LOS	D

Notes

Movement	EBL	EBT	EBR	WBL	WBT	WBR	NBL	NBT	NBR	SBL	SBT	SBR
Lane Configurations												
Volume (veh/h)	15	5	10	35	5	130	215	1365	35	15	1465	25
Number	7	4	14	3	8	18	5	2	12	1	6	16
Initial Q (Qb), veh	0	0	0	0	0	0	0	0	0	0	0	0
Ped-Bike Adj(A_pbT)	1.00		1.00	1.00		1.00	1.00		1.00	1.00		1.00
Parking Bus Adj	1.00	1.00	1.00	1.00	1.00	1.00	1.00	1.00	1.00	1.00	1.00	1.00
Adj Sat Flow veh/h/ln	190.0	186.3	190.0	186.3	186.3	190.0	186.3	186.3	190.0	186.3	186.3	190.0
Lanes	0	1	0	1	1	0	1	2	0	1	2	0
Cap, veh/h	84	32	34	131	7	208	312	2861	73	286	2543	43
Arrive On Green	0.14	0.14	0.14	0.14	0.14	0.14	0.06	0.79	0.79	0.70	0.70	0.70
Sat Flow, veh/h	251	234	254	1392	55	1537	1774	3617	92	341	3653	62
Grp Volume(v), veh/h	32	0	0	38	0	146	234	763	759	16	811	808
Grp Sat Flow(s),veh/h/ln	740	0	0	1392	0	1592	1774	1863	1846	341	1863	1852
Q Serve(g_s), s	0.2	0.0	0.0	2.9	0.0	9.5	3.8	15.8	15.8	1.9	25.4	25.6
Cycle Q Clear(g_c), s	9.7	0.0	0.0	12.6	0.0	9.5	3.8	15.8	15.8	7.4	25.4	25.6
Prop In Lane	0.50		0.34	1.00		0.97	1.00		0.05	1.00		0.03
Lane Grp Cap(c), veh/h	150	0	0	131	0	215	312	1474	1461	286	1297	1289
V/C Ratio(X)	0.21	0.00	0.00	0.29	0.00	0.68	0.75	0.52	0.52	0.06	0.63	0.63
Avail Cap(c_a), veh/h	167	0	0	147	0	234	536	1474	1461	286	1297	1289
HCM Platoon Ratio	1.00	1.00	1.00	1.00	1.00	1.00	1.00	1.00	1.00	1.00	1.00	1.00
Upstream Filter(I)	1.00	0.00	0.00	1.00	0.00	1.00	1.00	1.00	1.00	0.83	0.83	0.83
Uniform Delay (d), s/veh	41.7	0.0	0.0	50.8	0.0	44.7	15.7	4.0	4.0	7.2	8.9	8.9
Incr Delay (d2), s/veh	0.7	0.0	0.0	1.2	0.0	6.9	3.6	1.3	1.3	0.3	1.9	1.9
Initial Q Delay(d3),s/veh	0.0	0.0	0.0	0.0	0.0	0.0	0.0	0.0	0.0	0.0	0.0	0.0
%ile Back of Q (50%), veh/ln	0.8	0.0	0.0	1.1	0.0	4.3	6.8	6.3	6.2	0.2	11.3	11.2
Lane Grp Delay (d), s/veh	42.4	0.0	0.0	52.0	0.0	51.6	19.2	5.3	5.3	7.5	10.8	10.8
Lane Grp LOS	D			D		D	B	A	A	A	B	B
Approach Vol, veh/h		32			184			1756			1635	
Approach Delay, s/veh		42.4			51.7			7.2			10.8	
Approach LOS		D			D			A			B	

Timer								
Assigned Phs		4			8		5	2			6	
Phs Duration (G+Y+Rc), s		18.7			18.7		10.3	90.0			79.7	
Change Period (Y+Rc), s		4.0			4.0		4.0	4.0			4.0	
Max Green Setting (Gmax), s		16.0			16.0		20.0	86.0			62.0	
Max Q Clear Time (g_c+I1), s		11.7			14.6		5.8	17.8			27.6	
Green Ext Time (p_c), s		0.4			0.2		0.6	53.1			30.1	

Intersection Summary	
HCM 2010 Ctrl Delay	11.4
HCM 2010 LOS	B

Notes